E4821B

EI 48/20,5

External protection

10 VA - 70ºC/B

Simple primary
Simple secondary



Weight/unit:
340 gr



Weight/minibox (Units: 1)
340 gr



Weight/bigbox (Units: 36)
12240 gr

HR Ref.	Primary		Sec.		Sec. In		V_o (In=0)	External protection Fuse	
	P1	P2	S1	S2	Is1	Is2		Sec. (F) S1	Prim. (T) P1
E4821564	230 V	-	4.5 V	-	2222 mA	-	5.6 V	2500 mA	63 mA
E4821550	230 V	-	6 V	-	1667 mA	-	7.5 V	2000 mA	63 mA
E4821552	230 V	-	7.5 V	-	1333 mA	-	9.3 V	1600 mA	63 mA
E4821554	230 V	-	9 V	-	1111 mA	-	11.2 V	1250 mA	63 mA
E4821556	230 V	-	12 V	-	833 mA	-	15 V	1000 mA	63 mA
E4821558	230 V	-	15 V	-	667 mA	-	18.7 V	800 mA	63 mA
E4821560	230 V	-	18 V	-	556 mA	-	22.5 V	630 mA	63 mA
E4821562	230 V	-	24 V	-	417 mA	-	30 V	500 mA	63 mA

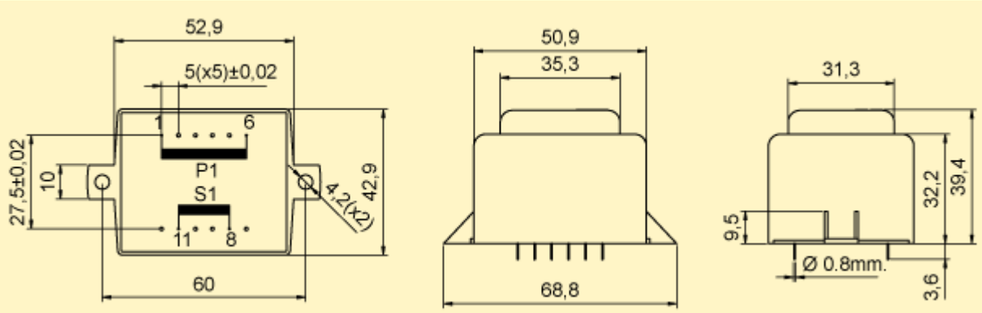

Technical characteristics:

- Designed and manufactured according regulations EN61558 EN60590 EN60472 UL506 UL1585
- Two-chamber coil
- Vacuum sealed
- Safety transformer class II / Protection index IP00 (For all models with no load voltage lower than 50V according to EN61558, and to 30V according to UL1585)
- Short-circuit-protected
- Self-extinguishing plastic UL94-VO
- Epoxy resin class F
- Isolation: Prim./Sec. = 10 MOhm to 500 Vcc - Sec./Sec. = 2 MOhm to 500 Vcc
- Dielectric strength Prim. / Sec. = 5 kV / 1min.
- Secondary voltage tolerances 5%
- Test at 100% of all electrical parameters in production
- Reliability tests for production batch (life term)
- Certificates of production test results (under request)
- Certifications VDE, UL; others certifications under request: CSA, SEMKO