MEGAVAL® HOLDER

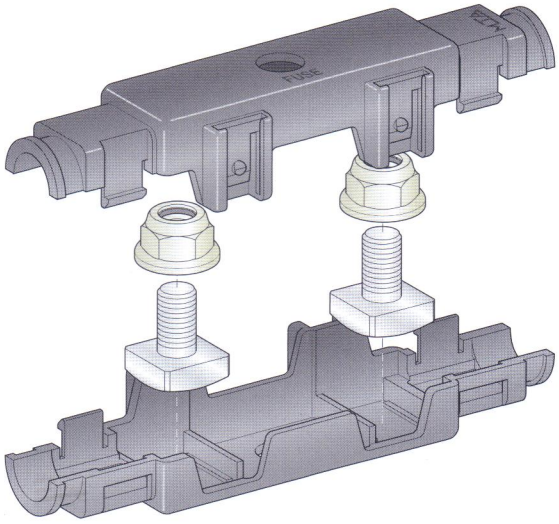

1

IMG	DESCRIPTION	WAY	MATERIAL	COLOUR		P/N	M.O.Q.
1	MEGAVAL HOLDER	1	PA66 GF30	■ Black		0300380	50
	KIT WITH TERMINALS					0100380	10

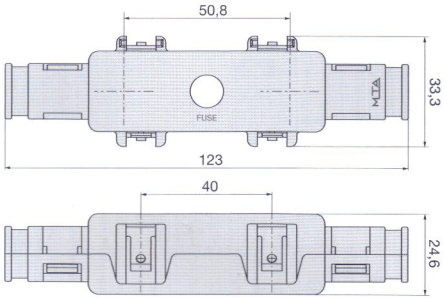

CONNECTIONS AND FIXINGS



0300395
0300398



MEGA L34