Part No.	AL-813B3C	Diff No.
8 mm	Round	Type : LED Lamps

Package Dimension：

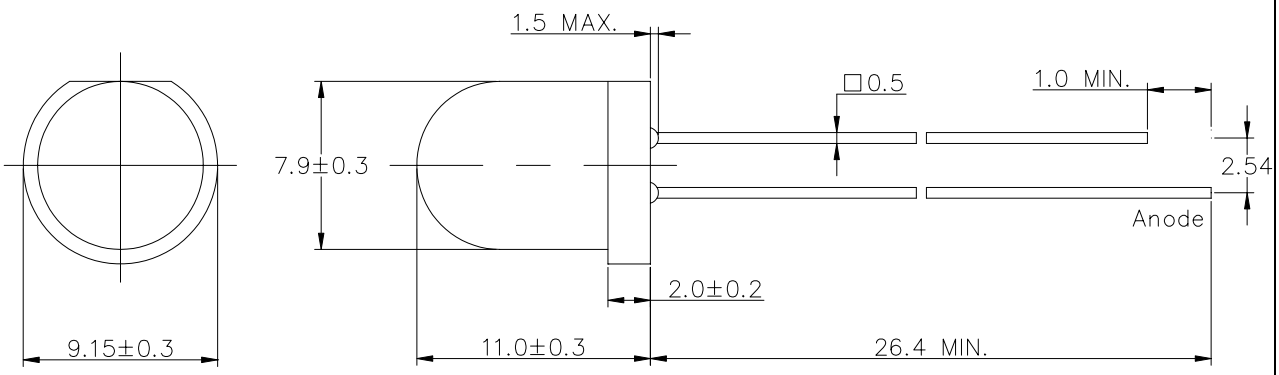

Notes:
1. All dimensions are in millimeter.
2.An epoxy meniscus may extend about.
1. 5mm(0.059") down to the lead
3.Tolerances unless Dimension ±0.25mm

■ Features：

- Choice of various viewing angles.
- Available on Tape and Reel.
- Reliable and robust.

■ Descriptions：

- The series is specially designed for application requiring higher brightness.
- The LED lamps are available with different color, intensities, epoxy colors etc.

■ Applications：

- TV set
- Monitor
- Telephone

Part No. AL-813B3C Diff No.

8 mm Round Type : LED Lamps

PART NO.	Chip		Lens Color
	Material	Emitted Color	
AL-813B3C	InGaN	Blue	Water Clear

■ Absolute Maximum Ratings at Ta=25℃

Parameter	Symbol	Rating	Unit
Forward Current	I_F	30	mA
Operating Temperature	Topr	-40 to +85	℃
Storage Temperature	Tstg	-40 to +85	℃
Soldering Temperature	Tsol	260 ±5	℃
Electrostatic Discharge	ESD	1000	V
Power Dissipation	P_D	120	mW
Peak Forward Current (Duty 1/10@1KHz)	I_F (Peak)	100	mA
Reverse Voltage	V_R	5	V

■ Electronic Optical Characteristics：

Parameter	Symbol	Min.	Typ.	Max.	Unit	Condition
Luminous Intensity	I_V	4000	6000	／	mcd	I_F=20mA
Viewing Angle	2θ1/2	／	30	／	deg	I_F=20mA
Peak Wavelength	λ p	／	475	／	nm	I_F=20mA
Dominant Wavelength	λ d	／	470	／	nm	I_F=20mA
Spectrum Radiation Bandwidth	△λ	／	30	／	nm	I_F=20mA
Forward Voltage	V_F	／	3.2	3.5	V	I_F=20mA
Reverse Current	I_R	／	／	50	μA	V_R=5V

Part No. AL-813B3C Diff No.

8 mm Round Type : LED Lamps

■ Reliability test items and conditions：

NO	Item	Test Conditions	Test Hours/Cycle	Sample Size	Ac/Re
1	Solder Heat	TEMP：260℃ ± 5℃	5 SEC	76 PCS	0/1
2	Temperature Cycle	H：+85℃ 30min ∫ 5min L：-55℃ 30min	50 CYCLES	76 PCS	0/1
3	Thermal Shock	H：+100℃ 5min ∫ 10set L：-10℃ 5min	50 CYCLES	76 PCS	0/1
4	High Temperature Storage	TEMP：100℃	1000 HRS	76 PCS	0/1
5	Low Temperature Storage	TEMP：-55℃	1000 HRS	76 PCS	0/1
6	DC Operating Life	TEMP：25℃ I_F=20mA	1000 HRS	76 PCS	0/1
7	High Temperature / High Humidity	85℃ / 85%RH	1000 HRS	76 PCS	0/1

Part No.	AL-813B3C	Diff No.
8 mm	Round	Type : LED Lamps

◆ **TYPICAL ELECTRICAL-OPTICAL CHARACTERISTICS CURVES**

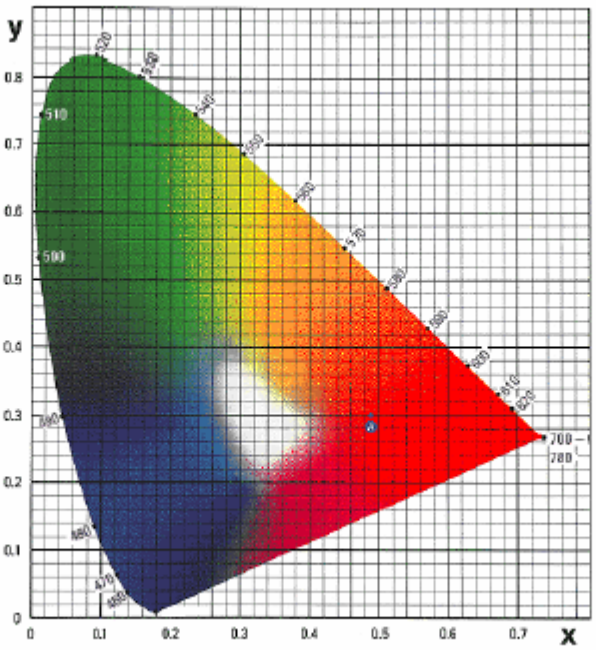

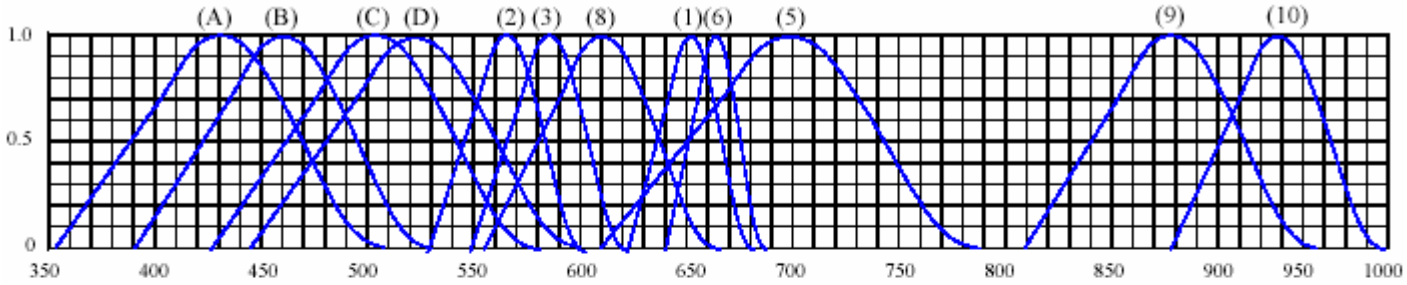

RELATIVE INTENSITY VS. WAVELENGTH(λp)

(1) GaAsP/GaAs 655nm/Red
(2) GaP 568nm/ Yellow Green
(3) GaAsP/GaP 585nm/Yellow
(4) GaAsP/GaP 635nm/Orange & Hi-Eff Red
(5) GaP 700nm/Bright Red
(6) GaAlAs/GaAs 660nm/Super Red
(8) GaAsP/GaP 610nm/Super Red
(9)- GaAlAs 880nm
(10)-GaAs/GaAs&GaAlAs/GaAs 940nm
(A)- GaN 430nm/Blue
(B)- InGaN 470nm/Blue
(C)- InGaN 502nm/Ultra Green
(D)- InGaN 523nm/Ultra Green

Part No.	AL-813B3C	Diff No.
8 mm	Round	Type : LED Lamps

◆ **CHARACTERISTICS DIAGRAMS**

FORWARD CURRENT VS. FORWARD VOLTAGE

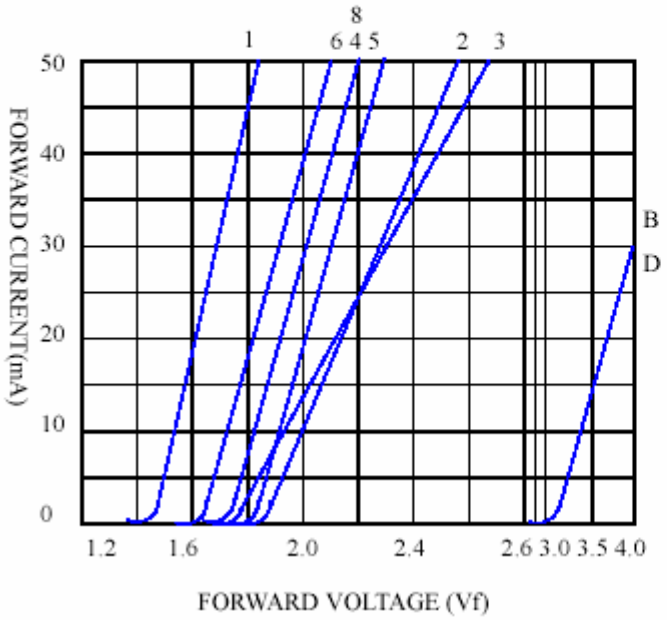

RELATIVE LUMINOUS INTENSITY VS. FORWARD CURRENT

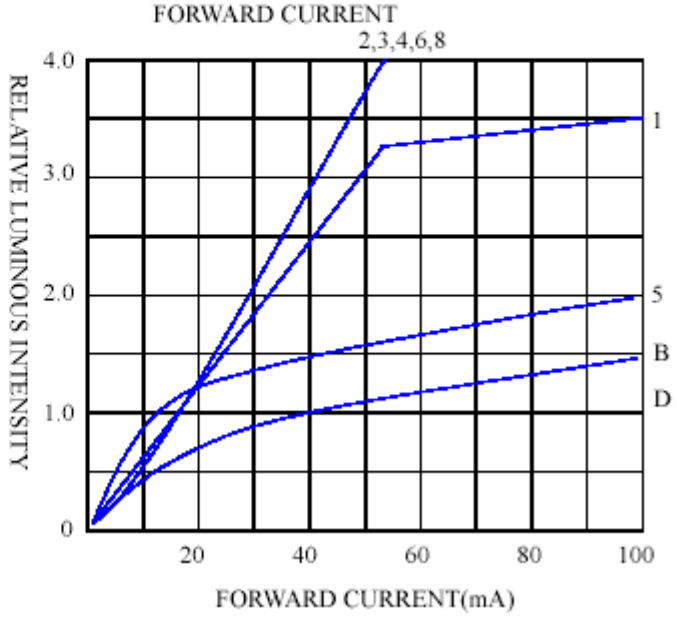

FORWARD CURRENT VS. AMBIENT TEMPERATURE

