

5W LED MR16

NEW 5W LED MR16

Approved By Customer	Designer	Checker	Approval

Date：2006/8/28
Version：1.0
Device No. : 3-RD-01-H0004
EDISON OPTO CORPORATION
4F, No. 800, Chung-Cheng Rd,
Chung-Ho, Taipei 235, Taiwan
Tel: 886-2-8227-6996
Fax: 886-2-8227-6997
http://www.edison-opto.com.tw

5W LED MR16



EdiPower series can provide different power-operation and different colors. They serve as optical engine appropriately and applied to lighting and projector in the form of MR16 or others.

Features

- **Compatible with traditional halogen MR16**
- **High power factor 95%**
- **Excellent thermal performance**
- **NO UV light**

Typical Applications

- **Entertainment lighting**
- **Architectural lighting**
- **Landscape lighting**
- **Bollards/Security/Garden lighting**
- **Interior Commercial lighting**

Package Outlines:

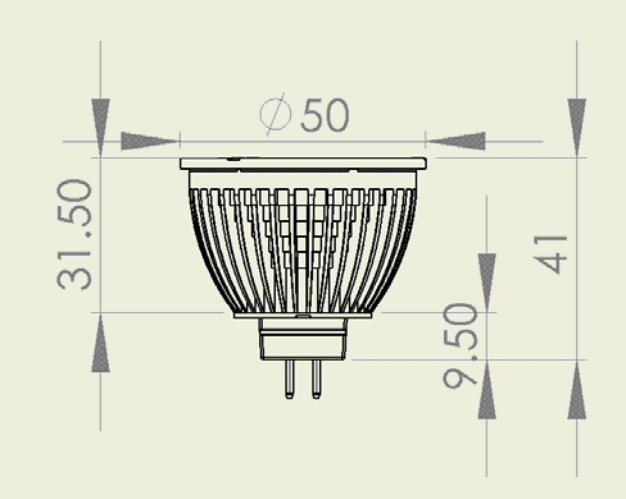

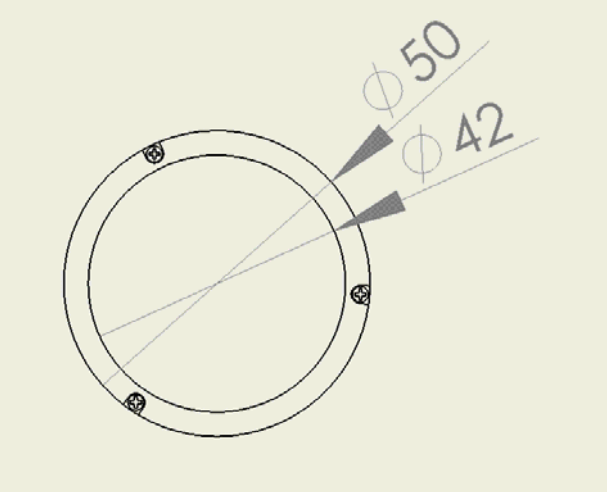

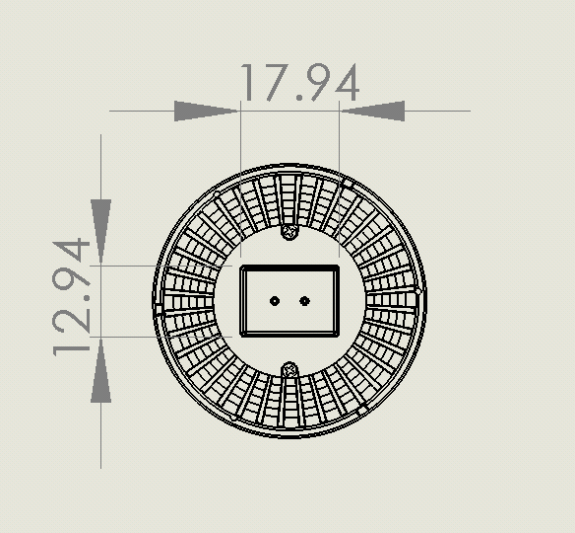

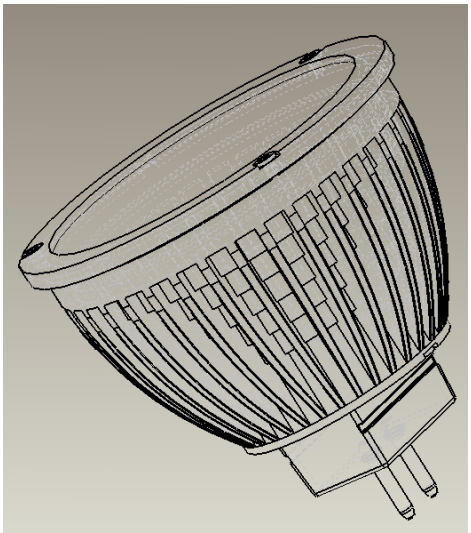

Unit:mm

Tolerance:±0.5 mm

Material:

Heat sink: Aluminum die casting

Bottom base: PBT, flammability V2 level

Surface of heat sink: anodization

Pin type: GU 5.3

Absolute Maximum Ratings

Parameter	Symbol	Rating	Units
Operating voltage (AC/DC)	**V**	**15**	V
LED Junction Temperature	**T_j**	**125**	℃
LED Case Temperature	**Tc**	**75**	℃
Operating Temperature	**T_{opr}**	**-30 ~ +40**	℃
Storage Temperature	**T_{stg}**	**-40 ~ +60**	℃
Input Voltage root-mean-square	**Vrms**	**9~13**	V
Heat sink temperature	**Th**	**75**	℃

Specification

Power consumption	Part Name	Color	Beam Angle	Lux@ 1m
5W	**EL16-51W2**	White	***10°***	***1800***
	EL16-51X2	Warm White	***10°***	***900***
	EL16-51R2	Red	***10°***	***1100***
	EL16-51A2	Amber	***10°***	***1100***
	EL16-51T2	True Green	***10°***	***1100***
	EL16-51B2	Blue	***10°***	***600***
Power consumption	**Part Name**	**Color**	**Beam Angle**	**Lux@1m**
5W	**EL16-52W2**	White	***38°***	***1000***
	EL16-52X2	Warm White	***38°***	***500***
	EL16-52R2	Red	***38°***	***600***
	EL16-52A2	Amber	***38°***	***600***
	EL16-52T2	True Green	***38°***	***600***
	EL16-52B2	Blue	***38°***	***300***
Power consumption	**Part Name**	**Color**	**Beam Angle**	**Lux@1m**
5W	**EL16-53W2**	White	***60°***	***80***
	EL16-53X2	Warm White	***60°***	***50***
	EL16-53R2	Red	***60°***	***50***
	EL16-53A2	Amber	***60°***	***50***
	EL16-53T2	True Green	***60°***	***50***
	EL16-53B2	Blue	***60°***	***25***

Photometrics

Color	Dominant Wavelength (λd)nm/CCT	Half Width (nm)
White	**6000～7200 K**	
Warm White	**2700~3100 K**	
Red	**620~630**	***25***
Amber	**585~595**	***25***
True Green	**520~530**	***35***
Blue	**460~470**	***25***

Performance

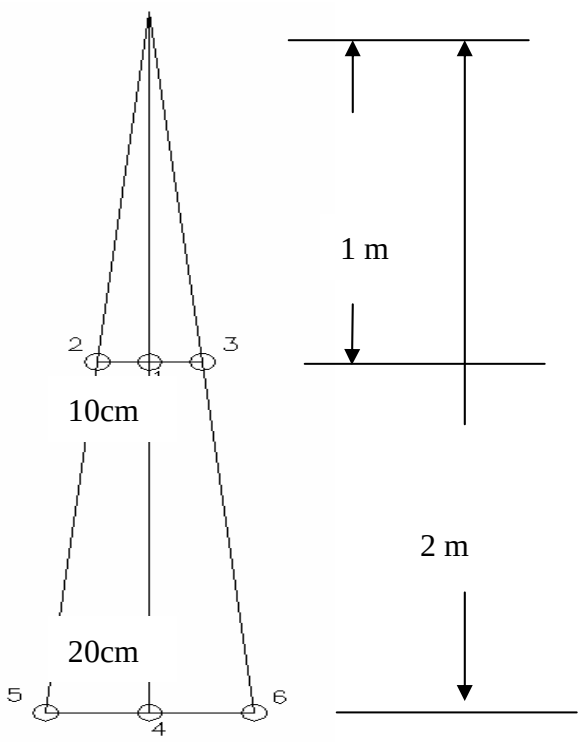

10° white

NO. / distance	1	2	3
1 m	**1800 lux**	**780 lux**	**780 lux**
	4	**5**	**6**
2 m	**510 lux**	**210 lux**	**210 lux**

38° white

NO. / distance	1	2	3
1 m	1000 lux	500 lux	500 lux
2 m	250 lux	150 lux	150 lux

60° white

NO. / distance	1	2	3
1 m	80 lux	60 lux	60 lux
2 m	40 lux	20 lux	20 lux

CCT ranks

CCT Group	CCT (°K)
Warm White	**2700 ~ 3100**
X1	2700 ~ 2900
X2	2900 ~ 3100
White	**6000 ~ 7200**
W3	6000 ~ 6400
W4	6400 ~ 6800
W5	6800 ~ 7200

Tolerance: +/- 30K

Light Pattern 10˚

The photo distance from MR16 is around 1 meter

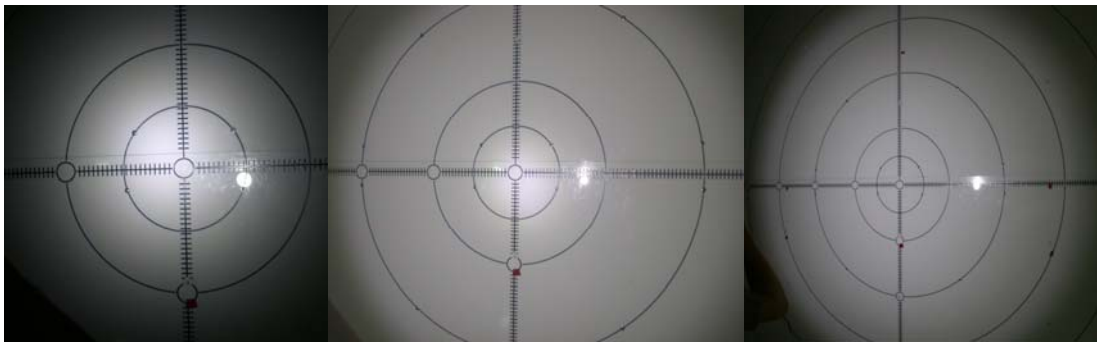

The light area is around 18x18 cm^2 for 10˚

The light area is around 40x40 cm^2 for 38˚

The light area is around 52x52 cm^2 for 60˚

Reliability

Color	Initial lux	168 hr. lux	500 hr. lux	1000 hr. lux	2000 hr. lux	Decay %
White	1750	1452	1440	1350	1320	-12.0%
Warm White	820	779	769	748	702	-14.4%
Red	850	840	840	809	727	-14.5%
Blue	720	684	670	662	634	-12.0%
True Green	900	886	848	814	803	-10.8%
Amber	880	838	796	770	726	-17.5%

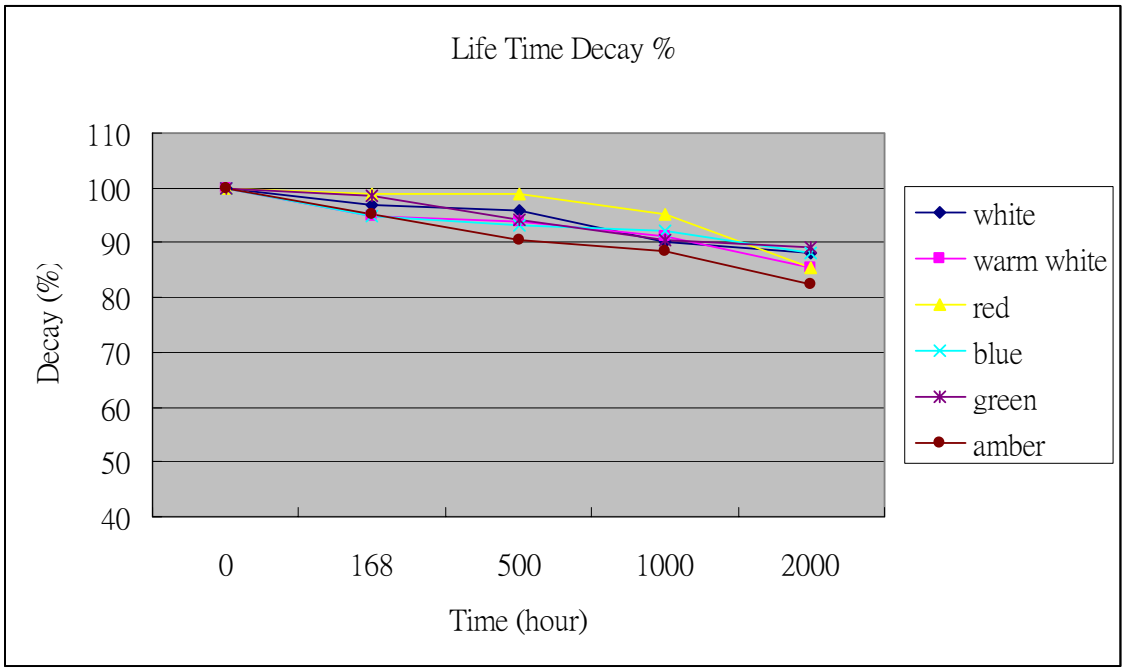

ASSIST FORM for LED Systems

Ts=65°C (heat sink) Tj=90 °C

$L_{70\%}$ **25,000hrs**

Package Dimensions







Dimension: 55 (width) x 60 (length) x 65 (height) mm

Weight: 83 g (10 degree light pattern)

69 g (38 degree light pattern)

53 g (60 degree light pattern)

Electronic Transformer Recommendation

Company: ANCHORN ENTERPRISE. , LTD

Website: http://www.globalmarket.com/hsinchang

Model No.

1. AET-H050-B

Input: AC 120V 50/60Hz

Output: AC 12V 50W/MAX



2. AET-3202R1

Input: AC 230V 50Hz

Output: AC 11.5V 60W/MAX



3. AET-D0501

Input: AC 120V 50/60Hz

Output: AC 11.5V 50W/MAX

