FESTOON LED BULB

Data Sheet

6mm LED Bulb Series

AB-06XXXX-XXXX-XX

Description:

These high voltage LED bulbs are specifically designed for electric equipment, indicator light switch and where a wide view angle.

The 5mm round shaped radiation pattern (40°) and high luminous intensity ensure that these devices are excellent for wide field of view outdoor applications where a wide viewing angle and readability in sunlight are essential.

High efficiency LED materials are used in this Bulb.

Every lamp is made with an advanced optical grade epoxy offering superior high shock and high temperature resistance in outdoor applications.

Feature:

- Wide view angle (40°)
- High luminous output
- Seven kind color
- Free to differentiate anode and cathode(Bi-Polar)
- Solid-state Vibration resistant
- Saving power
- Long life

Option:

- 4V to 12V DC
- Other industry standard base

Selection guide:

AB-06XX-XXXX-XX

AB:A-BRIGHT product

5:Round type dimensions

X: Color

XXXV: Input voltage

X: Bulb Base

A-BRIGHT

A-BRIGHT INDUSTRIAL CO.,LTD.

Part No.: AB-0651B0-12VD-CF-B ***6 Lamps LED Bulb***

PACKAGE DIMENSIONS:

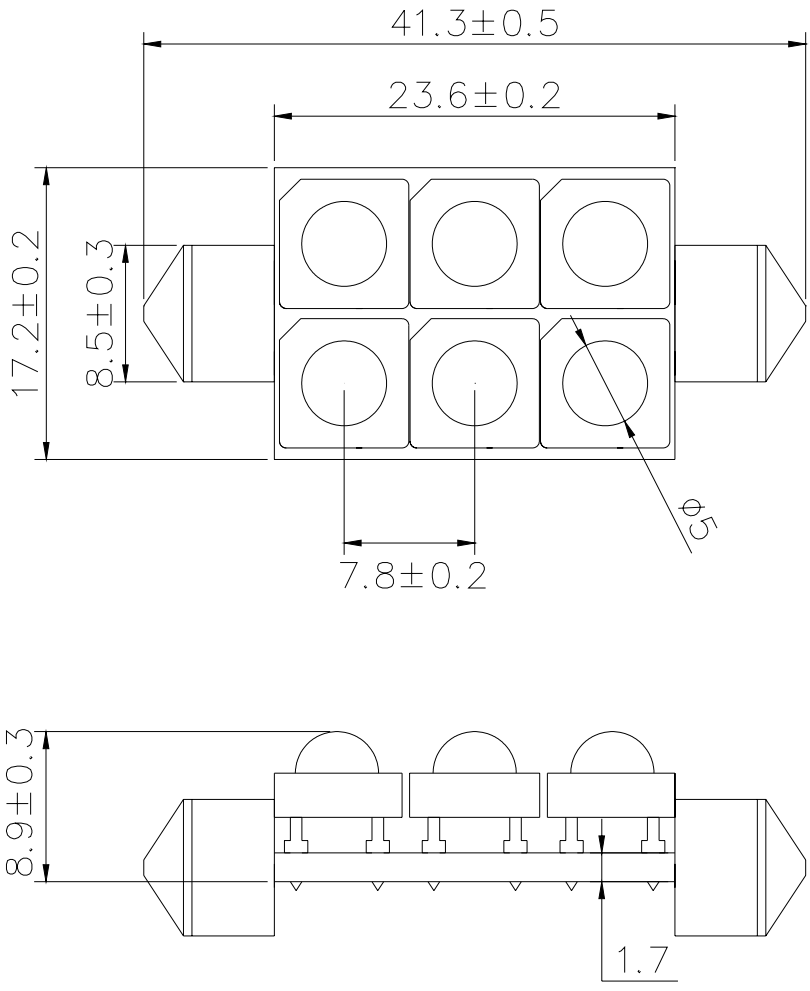

NOTE:

1.All dimensions are in millimeter.

2.All tolerance are ±0.25mm.

A-BRIGHT INDUSTRIAL CO., LTD.

Part No.: AB-0651B0-12VD-CF-B *6 Lamps LED Bulb*

FEATURE:

- SUPER LUMINOSITY BLUE LED (InGaN).
- WATER CLEAR PACKAGE.
- 5mm ALL RESIN MOLD.
- WIDE VIEWING ANGLE.
- ELECTRIC DC.

MATERIALS:

- LED LENS: UV RESISTENT EPOXY

ABSOLUTE MAXIMUM RATING: Ta = 25 ℃

- **PEAK OPERATE VOLTAGE..... 14 V**
- **OPERATING TEMPERATURE..... －25 TO ＋85℃**
- **STORAGE TEMPERATURE..... －35 TO ＋100℃**
- **LED BULB LIFE…….. 20000 HOURS**
  (LUMINANCE REDUCES to 50%)

ABSOLUTE OPTICAL CHARACTERISTIC Ta= 25℃

PARAMETER		SYMBOL	MIN	TYP	MAX	UNIT
Power dissipation		PO	-----	0.5	-----	W
Operate Voltage		V	-----	12	14	V
Luminous Flux	V_{IN}= 12V DC	LM	-----	8	-----	LM
Peak Wavelength	V_{IN}= 12V DC	λ p	-----	470	-----	nm
Forward Current	V_{IN}= 12V DC	I_F	-----	35	-----	mA
Viewing Angle		2θ1/2	-----	40	-----	deg