TS1117

1 Amp Low Dropout Positive Voltage Regulator

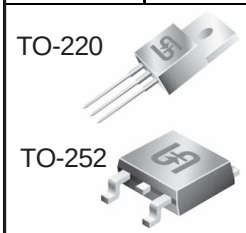

Low dropout voltage 1.3 V max.

General Description

The TS1117 Series of high performance positive voltage regulators are designed for use in applications requiring low dropout performance at full rated current, Additionally, the TS1117 Series provides excellent regulation over variations due to changes in line, load and temperature. Outstanding features include low dropout performance at rated current, fast transient response. The TS1117 Series are three terminal regulators with fixed and adjustable voltage options available in popular packages

Features

- ✧ Low dropout voltage 1.3 V max.
- ✧ Full current rating over line and temperature
- ✧ Fast transient response
- ✧ ±2%Total output regulation over line, load and temperature
- ✧ Adjust pin current max 120 μ A over temperature
- ✧ Line regulation typical 0.015%.
- ✧ Load regulation typical 0.05%.
- ✧ Fixed / adjustable output voltage
- ✧ TO-220, TO-263, TO-252& SOT-223 package

Block Diagram

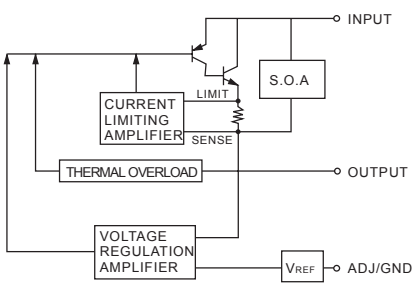

Ordering Information

DEVICE	OPERATING TEMPERATURE (Ambient)	PACKAGE
TS1117CZ-adj / 1.8V	-20 to +85℃	TO-220
TS1117CZ-2.5V / 2.85V		
TS1117CZ-3.3V		
TS1117CZ-5.0V		
TS1117CM-adj / 1.8V		TO-263
TS1117CM-2.5V / 2.85V		
TS1117CM-3.3V		
TS1117CM-5.0V		
TS1117CW-adj / 1.8V		SOT-223
TS1117CW-2.5V / 2.85V		
TS1117CW-3.3V		
TS1117CW-5.0V		
TS1117CP-adj / 1.8V		TO-252
TS1117CP-2.5V / 2.85V		
TS1117CP-3.3V		
TS1117CP-5.0V		

Absolute Maximum Rating

Input Voltage	V_{IN}	12	V
Power Dissipation	P_D	Internally Limited	W
Thermal Resistance Junction to Case	θ_{JC}	2.5	℃ / W
Thermal Resistance Junction to Ambient	θ_{JA}	50	
Operating Junction Temperature Range	T_J	0 to +125	℃
Operating Ambient Temperature Range	T_A	-20 to +85	
Storage Temperature Range	T_{STG}	-25 to +150	
Lead Temperature (Soldering) 10 Sec	T_{LEAD}	260	

Electrical Characteristics

Unless otherwise specified,
Adjust V_{IN}=2.75V to 12V and Adjust I_O=10mA to 1.0A
Fixed V_{IN}=4.75V to 12V and Fixed I_O=10mA to 1.0A
(For Fixed 5.0V Output Version, V_{IN}=7.5V to 12V)

PARAMETER	SYMBOL	TEST CONDITIONS			TEST LIMITS			UNITS
		V_{IN} - V_{OUT}	I_O	T_J[4]	MIN	TYP	MAX	
Output Voltage[1]	V_O	5V	10mA	25	0.99 | V_O |	V_O	1.01 | V_O |	V
Fixed Voltage				Over Temp.	0.98 | V_O |		1.02 | V_O |	
Reference Voltage[1]	V_{REF}	5V	10mA	25	1.238	1.250	1.262	
Adj Voltage				Over Temp.	1.225		1.275	
Line Regulation[1]	$REG_{(LINE)}$		10mA	25		0.015	0.2	%
(Vin-Vout=3V)				Over Temp.		0.035		
Load Regulation[1]	$REG_{(LOAD)}$			25		0.05	0.3	
(Vin-Vout=3V)				Over Temp.		0.2	0.4	
Dropout Voltage	V_D			25		1		V
$\triangle V_{REF}$=1%				Over Temp.		1.1	1.3	
Current Limit	I_{CL}			Over Temp.	1.0	1.1		A
(Vin-Vout=5V)								
Quiescent Current	I_Q	5V				12	14	mA
Fixed Model								
Temperature Coefficient	T_C					0.005		% / ℃
Adjust Pin Current	I_{ADJ}			25		55		μA
				Over Temp.			120	
Adjust Pin Current Change	$\triangle I_{ADJ}$					0.2	5	
Temperature Stability	T_S	5V	500mA	Over Temp.		0.5		%
Minimum Load Current	I_O	5V				5	10	mA
Adjust Model								
RMS Output Noise[2]	V_N			25		0.003		$\%V_O$
Ripple Rejection Ratio[3]	R_A	5V	1.0A	Over Temp.	60	72		dB

(1) Low duty cycle pulse testing with Kelvin connections required.
(2) Bandwidth of 10Hz to 10KHz.
(3) 120Hz input ripple(C_{ADJ} for ADJ)=25μF.
(4) Over Temp. - over specified operating junction temperature range.

Typical Application Circuit

Fixed Voltage Regulator(1)(2)

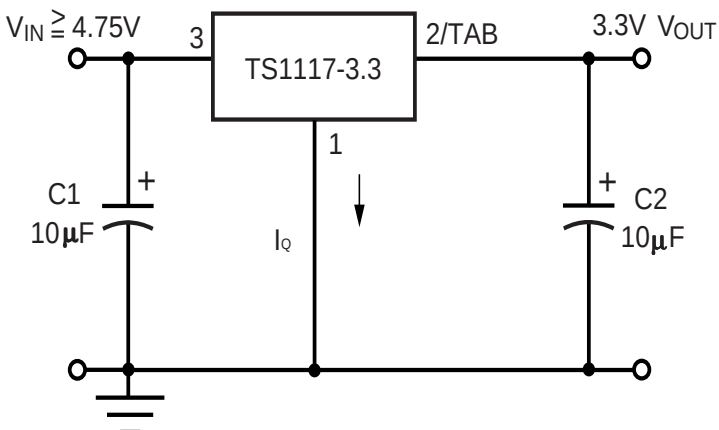

(1) C1 NEEDED IF DEVICE IS FAR FROM FILTER CAPACITORS
(2) C2 REQUIRED FOR STABILITY

Adjustable Voltage Regulator(1)(2)

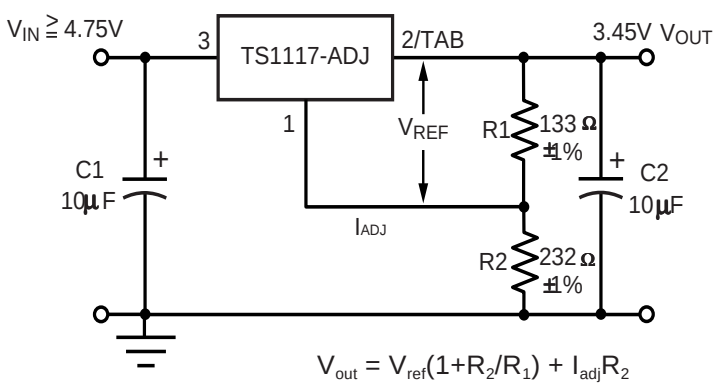

$V_{out} = V_{ref}(1+R_2/R_1) + I_{adj}R_2$

(1) C1 NEEDED IF DEVICE IS FAR FROM FILTER CAPACITORS
(2) C2 REQUIRED FOR STABILITY

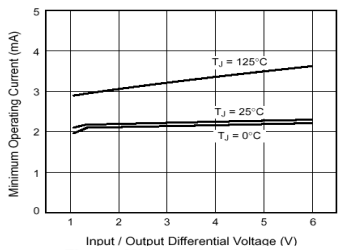

Fig. 1 – Minimum Load Current (Adjustable Version)

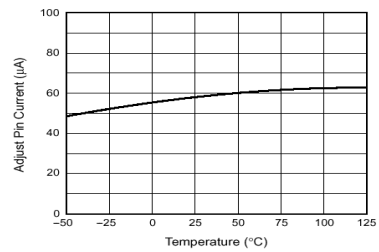

Fig. 2 – Adjust Pin Current

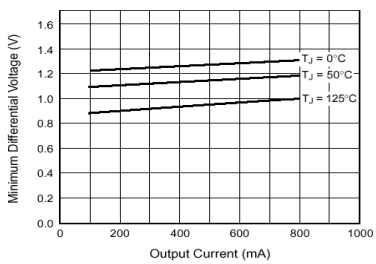

Fig. 3 – Dropout Voltage

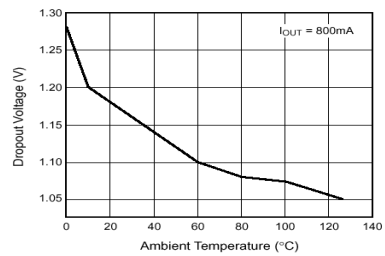

Fig. 4 – Dropout Voltage v.s. Temperature

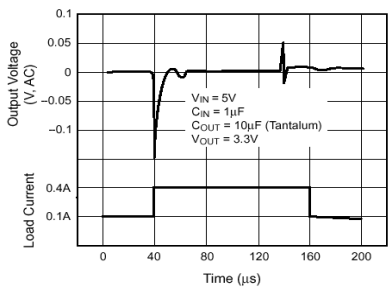

Fig. 5 – Load Transient Response

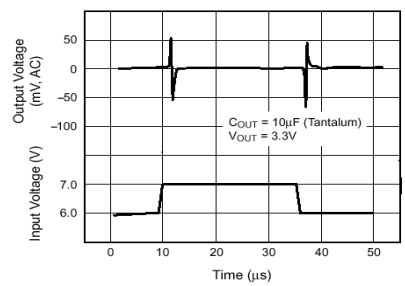

Fig. 6 – Line Transient Response

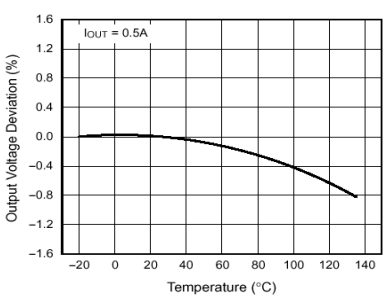

Fig. 7 – Temperature Stability

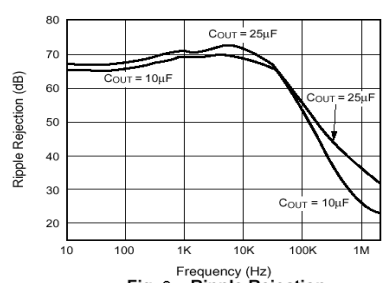

Fig. 8 – Ripple Rejection (with C_{adj} 25µF)

TO-220 Mechanical drawing

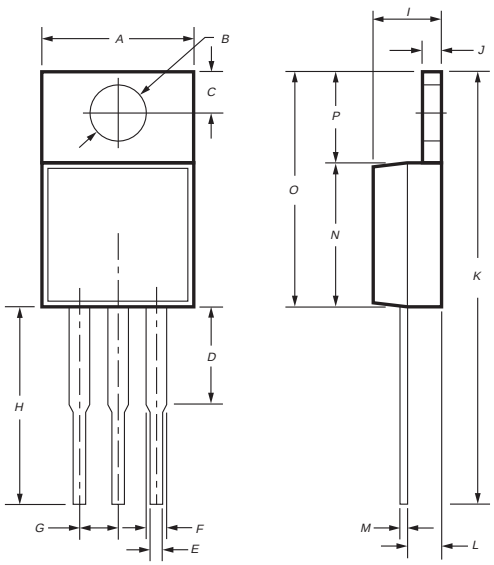

TO-220 DIMENSION				
DIM	MILLIMETERS		INCHES	
	MIN	MAX	MIN	MAX
A	10.00	10.50	0.394	0.413
B	3.24	4.44	0.128	0.175
C	2.44	2.94	0.096	0.116
D	3.565	4.315	0.140	0.170
E	0.68	0.92	0.027	0.036
F	1.115	1.485	0.044	0.058
G	2.345	2.715	0.092	0.107
H	13.49	14.31	0.531	0.563
I	4.475	5.225	0.176	0.206
J	1.15	1.39	0.045	0.055
K	27.78	29.62	1.094	1.166
L	2.175	2.925	0.086	0.115
M	0.297	0.477	0.012	0.019
N	8.28	8.80	0.326	0.346
O	14.29	15.31	0.563	0.603
P	6.01	6.51	0.273	0.256

TO-263 Mechanical drawing

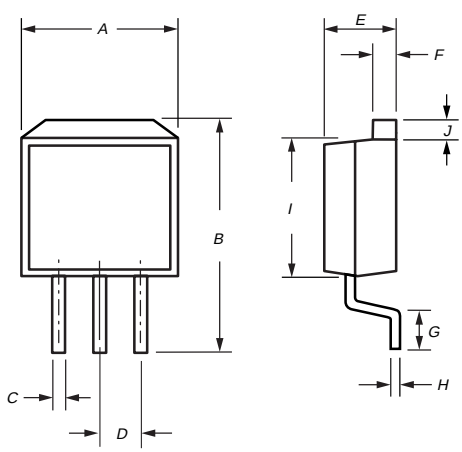

TO-263 DIMENSION				
DIM	MILLIMETERS		INCHES	
	MIN	MAX	MIN	MAX
A	10.00	10.50	0.394	0.413
B	14.60	15.87	0.575	0.625
C	0.68	0.92	0.027	0.036
D	2.42	2.66	0.095	0.105
E	4.31	4.83	0.170	0.190
F	1.14	1.40	0.045	0.055
G	2.28	2.79	0.090	0.110
H	0.45	0.73	0.018	0.029
I	8.28	8.80	0.326	0.346
J	1.14	1.40	0.045	0.055

TO-252 Mechanical drawing

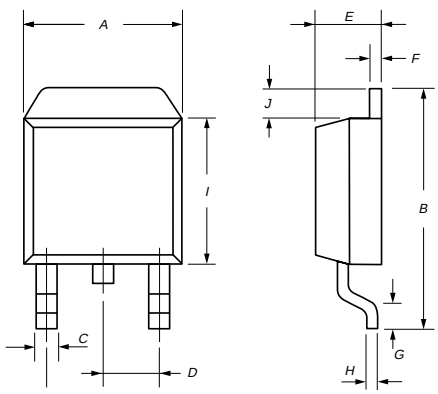

TO-252 DIMENSION				
DIM	MILLIMETERS		INCHES	
	MIN	MAX	MIN	MAX
A	10.23	10.28	0.403	0.405
B	9.92	9.96	0.391	0.392
C	0.50	0.54	0.020	0.021
D	1.83	1.96	0.072	0.077
E	4.59	4.61	0.180	0.181
F	0.49	0.51	0.019	0.020
G	1.15	1.22	0.045	0.048
H	0.43	0.47	0.017	0.019
I	5.37	5.40	0.211	0.213
J	1.33	1.39	0.052	0.055

SOT-223 Mechanical drawing

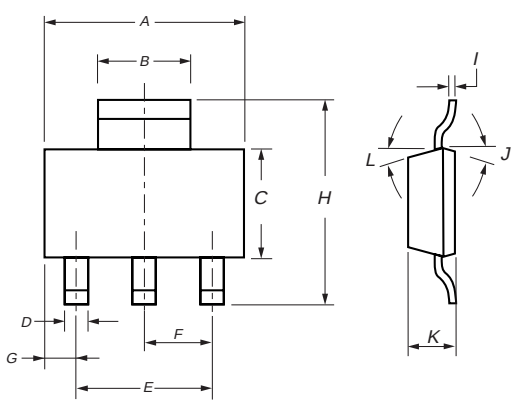

SOT-223 DIMENSION				
DIM	MILLIMETERS		INCHES	
	MIN	MAX	MIN	MAX
A	6.30	6.80	0.248	0.268
B	2.90	3.10	0.114	0.122
C	3.30	3.70	0.130	0.146
D	0.63	0.83	0.025	0.033
E	4.60	4.60	0.181	0.181
F	2.30	2.30	0.091	0.091
G	0.83	1.04	0.033	0.041
H	6.70	7.30	0.264	0.287
I	0.255	0.355	0.010	0.014
J	16°	16°	16°	16°
K	1.55	1.80	0.061	0.070
L	10°	10°	10°	10°