TIP142, TIP147

Complementary power Darlington transistors

Datasheet — production data

Features

- Monolithic Darlington configuration
- Integrated antiparallel collector-emitter diode

Applications

- Linear and switching industrial equipment

Description

The devices are manufactured in planar technology with “base island” layout and monolithic Darlington configuration. The resulting transistors show exceptional high gain performance coupled with very low saturation voltage.

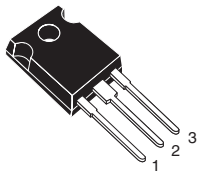

TO-247

Figure 1. Internal schematic diagrams

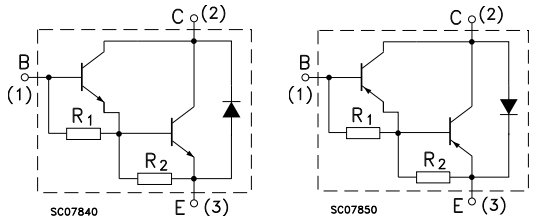

R_1 typ. = 5 kΩ
R_2 typ. = 60 Ω

R_1 typ. = 8 kΩ
R_2 typ. = 100 Ω

Table 1. Device summary

Part number	Marking	Polarity	Package	Packaging
TIP142	TIP142	NPN	TO-247	Tube
TIP147	TIP147	PNP		

This is information on a product in full production. www.st.com

1 Absolute maximum ratings

Table 2. Absolute maximum ratings

Symbol	Parameter	Value	Unit
V_{CBO}	Collector-base voltage (I_E = 0)	100	V
V_{CEO}	Collector-emitter voltage (I_B = 0)	100	V
V_{EBO}	Emitter-base voltage (I_C = 0)	5	V
I_C	Collector current	10	A
I_{CM}	Collector peak current	20	A
I_B	Base current	0.5	A
P_{TOT}	Total dissipation at T_{case} = 25 °C	125	W
T_{STG}	Storage temperature	-65 to 150	°C
T_J	Max. operating junction temperature	150	°C

Note: For PNP type voltage and current are negative.

Table 3. Thermal data

Symbol	Parameter		Value	Unit
R_{thJC}	Thermal resistance junction-case	max	1	°C/W

2 Electrical characteristics

T_{case} = 25 °C; unless otherwise specified.

Table 4. Electrical characteristics

Symbol	Parameter	Test conditions	Min.	Typ.	Max.	Unit
I_{CBO}	Collector cut-off current (I_E = 0)	V_{CB} = 100 V			1	mA
I_{CEO}	Collector cut-off current (I_B = 0)	V_{CE} = 50 V			2	mA
I_{EBO}	Emitter cut-off current (I_C = 0)	V_{EB} = 5 V			2	mA
$V_{CEO(sus)}$(1)	Collector-emitter sustaining voltage (I_B = 0)	I_C = 30 mA	100			V
$V_{CE(sat)}$(1)	Collector-emitter saturation voltage	I_C = 5 A I_B = 10 mA I_C = 10 A I_B = 40 mA			2 3	V V
$V_{BE(on)}$(1)	Base-emitter on voltage	I_C = 10 A V_{CE} = 4 V			3	V
h_{FE}(1)	DC current gain	I_C = 5 A V_{CE} = 4 V I_C = 10 A V_{CE} = 4 V	1000 500			
t_{on} t_{off}	Resistive load Turn-on time Turn-off time	I_C = 10 A R_L = 3 Ω I_{B1} = -I_{B2} = 40 mA		0.9 4		µs µs

1. Pulse test: pulse duration ≤300 µs, duty cycle ≤2 %.

For PNP type voltage and current are negative.

3 Electrical characteristics (curve)

Figure 2. Safe operating area

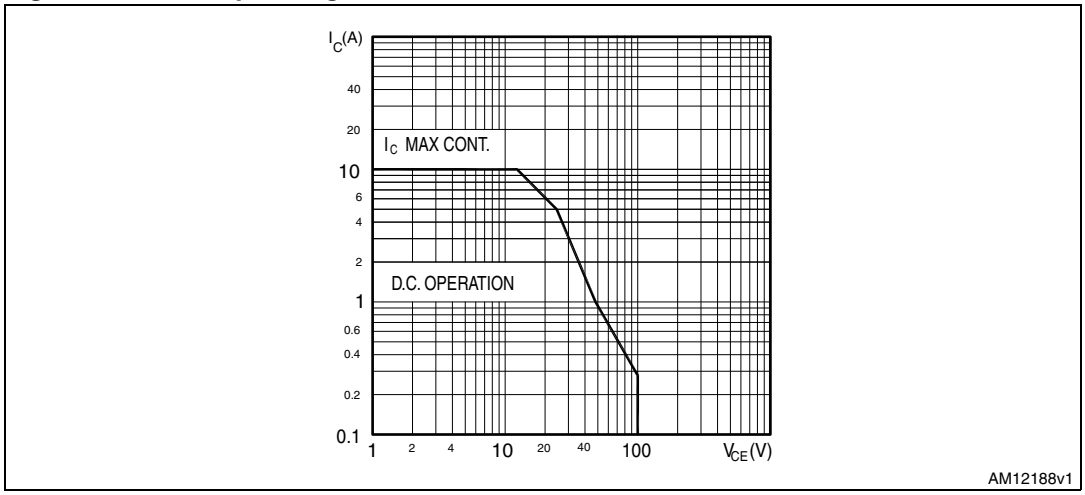

4 Test circuits

Figure 3. Resistive load switching test circuit (NPN type)

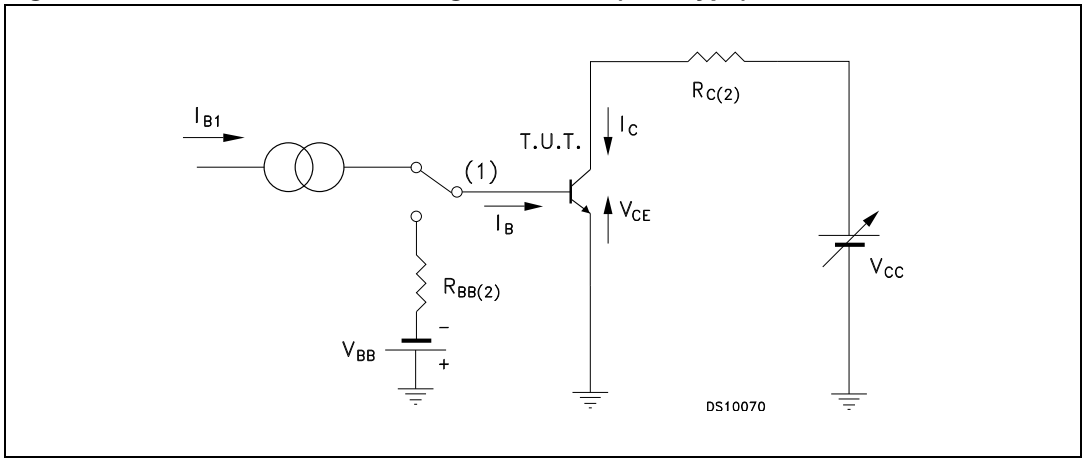

1. Fast electronic switch
2. Non-inductive resistor

Figure 4. Resistive load switching test circuit (PNP type)

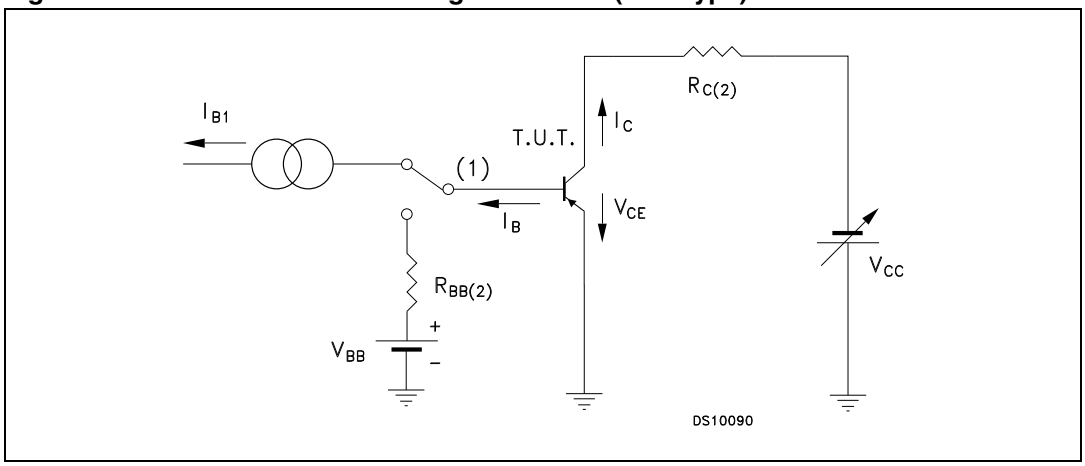

1. Fast electronic switch
2. Non-inductive resistor

5 Package mechanical data

In order to meet environmental requirements, ST offers these devices in different grades of ECOPACK® packages, depending on their level of environmental compliance. ECOPACK® specifications, grade definitions and product status are available at: *www.st.com*.
ECOPACK® is an ST trademark.

Table 5. TO-247 mechanical data

Dim.	mm.		
	Min.	Typ.	Max.
A	4.85		5.15
A1	2.20		2.60
b	1.0		1.40
b1	2.0		2.40
b2	3.0		3.40
c	0.40		0.80
D	19.85		20.15
E	15.45		15.75
e	5.30	5.45	5.60
L	14.20		14.80
L1	3.70		4.30
L2		18.50	
∅P	3.55		3.65
∅R	4.50		5.50
S	5.30	5.50	5.70

Figure 5. TO-247 drawing

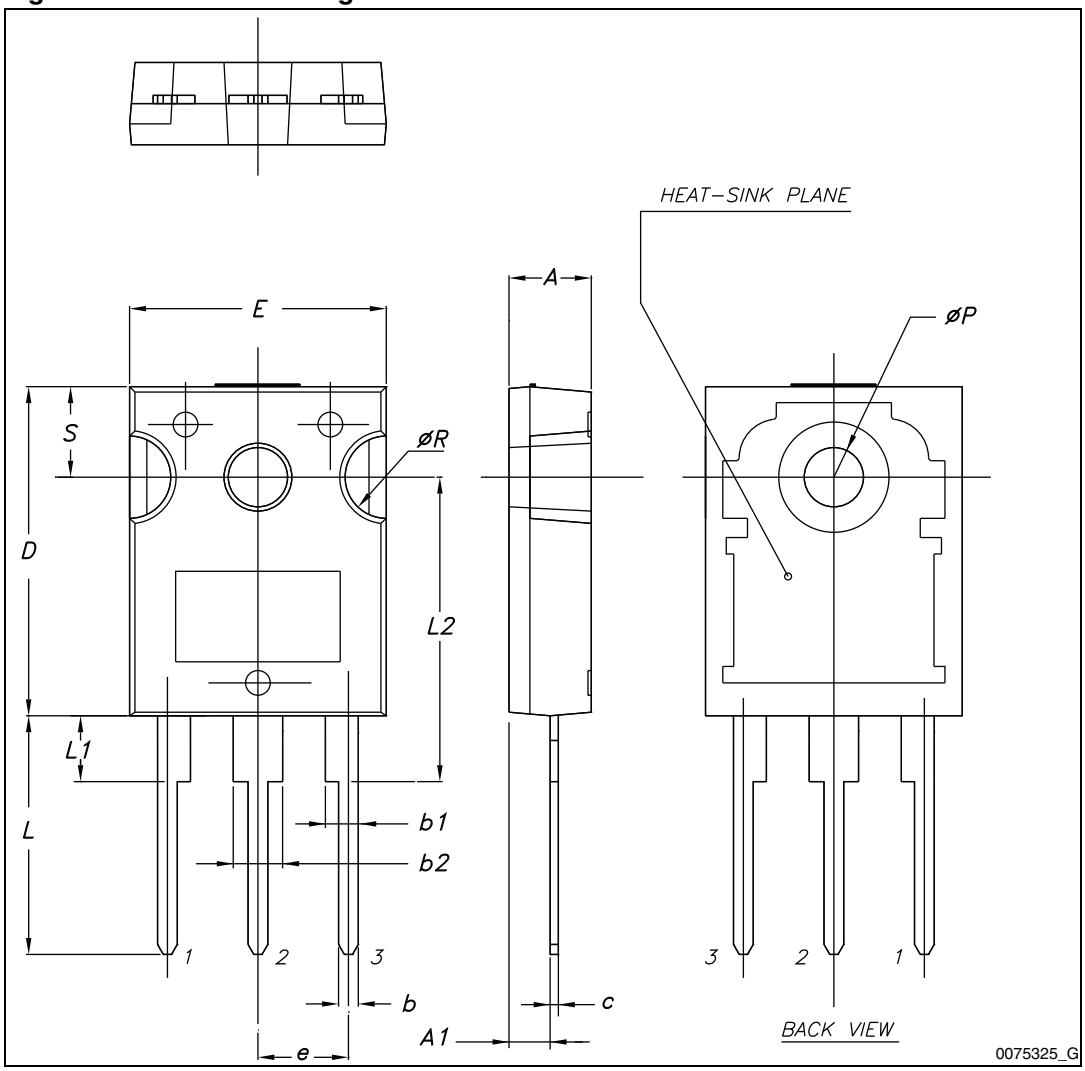

6 Revision history

Table 6. Document revision history

Date	Revision	Changes
15-Oct-2007	6	Package change from SOT-93 to TO-247.
12-May-2010	7	Technology change from epitaxial base to planar base island.
19-Apr-2012	8	Added: *Figure 2: Safe operating area* Updated: mechanical data

Please Read Carefully:

Information in this document is provided solely in connection with ST products. STMicroelectronics NV and its subsidiaries (“ST”) reserve the right to make changes, corrections, modifications or improvements, to this document, and the products and services described herein at any time, without notice.

All ST products are sold pursuant to ST’s terms and conditions of sale.

Purchasers are solely responsible for the choice, selection and use of the ST products and services described herein, and ST assumes no liability whatsoever relating to the choice, selection or use of the ST products and services described herein.

No license, express or implied, by estoppel or otherwise, to any intellectual property rights is granted under this document. If any part of this document refers to any third party products or services it shall not be deemed a license grant by ST for the use of such third party products or services, or any intellectual property contained therein or considered as a warranty covering the use in any manner whatsoever of such third party products or services or any intellectual property contained therein.

UNLESS OTHERWISE SET FORTH IN ST’S TERMS AND CONDITIONS OF SALE ST DISCLAIMS ANY EXPRESS OR IMPLIED WARRANTY WITH RESPECT TO THE USE AND/OR SALE OF ST PRODUCTS INCLUDING WITHOUT LIMITATION IMPLIED WARRANTIES OF MERCHANTABILITY, FITNESS FOR A PARTICULAR PURPOSE (AND THEIR EQUIVALENTS UNDER THE LAWS OF ANY JURISDICTION), OR INFRINGEMENT OF ANY PATENT, COPYRIGHT OR OTHER INTELLECTUAL PROPERTY RIGHT.

UNLESS EXPRESSLY APPROVED IN WRITING BY TWO AUTHORIZED ST REPRESENTATIVES, ST PRODUCTS ARE NOT RECOMMENDED, AUTHORIZED OR WARRANTED FOR USE IN MILITARY, AIR CRAFT, SPACE, LIFE SAVING, OR LIFE SUSTAINING APPLICATIONS, NOR IN PRODUCTS OR SYSTEMS WHERE FAILURE OR MALFUNCTION MAY RESULT IN PERSONAL INJURY, DEATH, OR SEVERE PROPERTY OR ENVIRONMENTAL DAMAGE. ST PRODUCTS WHICH ARE NOT SPECIFIED AS "AUTOMOTIVE GRADE" MAY ONLY BE USED IN AUTOMOTIVE APPLICATIONS AT USER’S OWN RISK.

Resale of ST products with provisions different from the statements and/or technical features set forth in this document shall immediately void any warranty granted by ST for the ST product or service described herein and shall not create or extend in any manner whatsoever, any liability of ST.

ST and the ST logo are trademarks or registered trademarks of ST in various countries.

Information in this document supersedes and replaces all information previously supplied.

The ST logo is a registered trademark of STMicroelectronics. All other names are the property of their respective owners.

© 2012 STMicroelectronics - All rights reserved

STMicroelectronics group of companies

Australia - Belgium - Brazil - Canada - China - Czech Republic - Finland - France - Germany - Hong Kong - India - Israel - Italy - Japan - Malaysia - Malta - Morocco - Philippines - Singapore - Spain - Sweden - Switzerland - United Kingdom - United States of America

www.st.com