Silicon PNP Power Transistors 2N6107 2N6109 2N6111

DESCRIPTION

- With TO-220 package
- Complement to NPN type: 2N6288; 2N6290 ;2N6292

APPLICATIONS

- Power amplifier and switching circuits applications

PINNING

PIN	DESCRIPTION
1	Emitter
2	Collector;connected to mounting base
3	Base

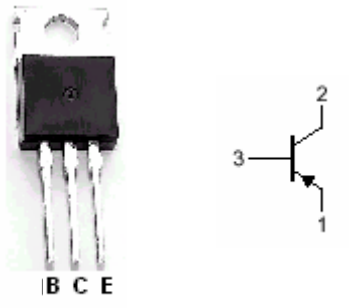

Fig.1 simplified outline (TO-220) and symbol

Absolute maximum ratings(Ta=25℃)

SYMBOL	PARAMETER		CONDITIONS	VALUE	UNIT
V_{CBO}	Collector-base voltage	2N6107	Open emitter	-40	V
		2N6109		-60	
		2N6111		-80	
V_{CEO}	Collector-emitter voltage	2N6107	Open base	-30	V
		2N6109		-50	
		2N6111		-70	
V_{EBO}	Emitter-base voltage		Open collector	-5	V
I_C	Collector current			-7	A
I_{CM}	Collector current-peak			-10	A
I_B	Base current			-3	A
P_T	Total power dissipation		T_C=25℃	40	W
T_j	Junction temperature			150	℃
T_{stg}	Storage temperature			-65~150	℃

THERMAL CHARACTERISTICS

SYMBOL	PARAMETER	MAX	UNIT
$R_{th\ j\text{-}c}$	Thermal resistance from junction to case	3.125	℃/W

Silicon PNP Power Transistors 2N6107 2N6109 2N6111

CHARACTERISTICS

Tj=25℃ unless otherwise specified

SYMBOL	PARAMETER		CONDITIONS	MIN	TYP.	MAX	UNIT
$V_{CEO(SUS)}$	Collector-emitter sustaining voltage	2N6107	I_C=-0.1A ;I_B=0	-30			V
		2N6109		-50			
		2N6111		-70			
V_{CEsat}	Collector-emitter saturation voltage		I_C=-7A;I_B=-3A			-3.5	V
V_{BE}	Base-emitter on voltage		I_C=-7A ; V_{CE}=-4V			-3.0	V
I_{CEO}	Collector cut-off current	2N6107	V_{CE}=-20V; I_B=0			-1.0	mA
		2N6109	V_{CE}=-40V; I_B=0				
		2N6111	V_{CE}=-60V; I_B=0				
I_{CEX}	Collector cut-off current	2N6107	V_{CE}=-40V; V_{BE}=-1.5V V_{CE}=-30V; $_{BE}$=-1.5V,T_C=125℃			-0.1 -2.0	mA
		2N6109	V_{CE}=-60V; V_{BE}=-1.5V V_{CE}=-50V; $_{BE}$=-1.5V,T_C=125℃			-0.1 -2.0	
		2N6111	V_{CE}=-80V; V_{BE}=-1.5V V_{CE}=-70V; $_{BE}$=-1.5V,T_C=125℃			-0.1 -2.0	
I_{EBO}	Emitter cut-off current		V_{EB}=-5V; I_C=0			-1.0	mA
h_{FE-1}	DC current gain	2N6107	I_C=-2A ; V_{CE}=-4V	30		150	
		2N6109	I_C=-2.5A ; V_{CE}=-4V				
		2N6111	I_C=-3A ; V_{CE}=-4V				
h_{FE-2}	DC current gain		I_C=-7A ; V_{CE}=-4V	2.3			
f_T	Transition frequency		I_C=-0.5A ; V_{CE}=-4V;f=1MHz	10			MHz

PACKAGE OUTLINE

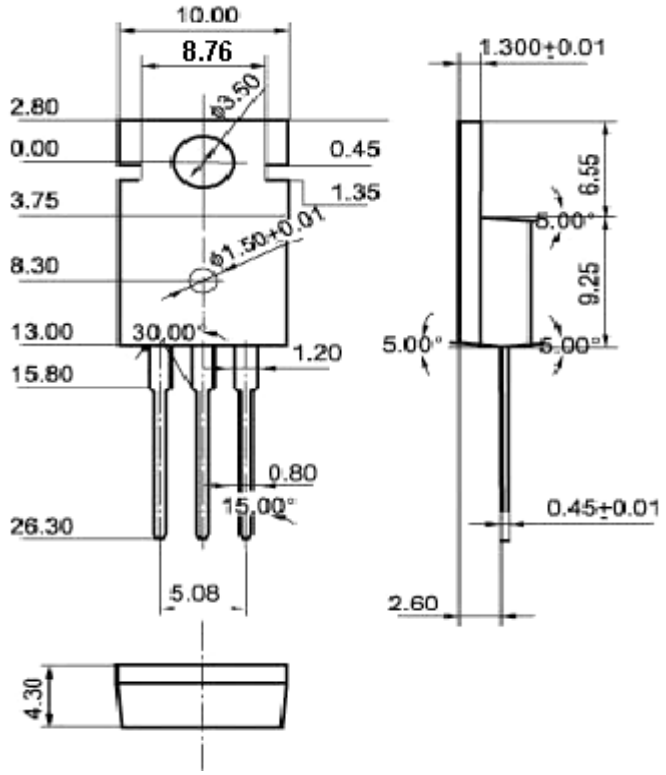

Fig.2 Outline dimensions(unindicated tolerance:±0.10 mm)