# Silicon PNP Power Transistors 2N6489 2N6490 2N6491

## DESCRIPTION

- With TO-220 package
- Excellent safe operating area
- Complement to type 2N6486 2N6487 2N6488 respectively

## APPLICATIONS

- Power amplifier and medium speed switching applications

**PINNING**

| PIN | DESCRIPTION |
|---|---|
| 1 | Emitter |
| 2 | Collector;connected to mounting base |
| 3 | Base |

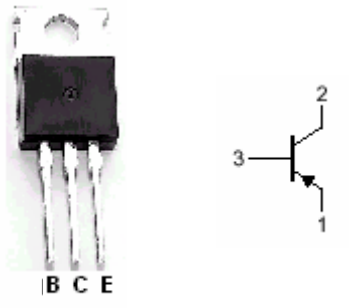


**Fig.1 simplified outline (TO-220) and symbol**

## Absolute maximum ratings(Ta=25℃)

| SYMBOL | PARAMETER | | CONDITIONS | VALUE | UNIT |
|---|---|---|---|---|---|
| $V_{CBO}$ | Collector-base voltage | 2N6489 | Open emitter | -50 | V |
| | | 2N6490 | | -70 | |
| | | 2N6491 | | -90 | |
| $V_{CEO}$ | Collector-emitter voltage | 2N6489 | Open base | -40 | V |
| | | 2N6490 | | -60 | |
| | | 2N6491 | | -80 | |
| $V_{EBO}$ | Emitter-base voltage | | Open collector | -5 | V |
| $I_C$ | Collector current | | | -15 | A |
| $I_B$ | Base current | | | -5 | A |
| $P_T$ | Total power dissipation | | $T_C$=25℃ | 75 | W |
| $T_j$ | Junction temperature | | | 150 | ℃ |
| $T_{stg}$ | Storage temperature | | | -65~150 | ℃ |

## THERMAL CHARACTERISTICS

| SYMBOL | PARAMETER | MAX | UNIT |
|---|---|---|---|
| $R_{th\ j\text{-}c}$ | Thermal resistance from junction to case | 1.67 | ℃/W |

# Silicon PNP Power Transistors 2N6489 2N6490 2N6491

## CHARACTERISTICS

**Tj=25℃ unless otherwise specified**

| SYMBOL | PARAMETER | | CONDITIONS | MIN | TYP. | MAX | UNIT |
|---|---|---|---|---|---|---|---|
| $V_{CEO(SUS)}$ | Collector-emitter sustaining voltage | 2N6489 | $I_C$=-0.2A ;$I_B$=0 | -40 | | | V |
| | | 2N6490 | | -60 | | | |
| | | 2N6491 | | -80 | | | |
| $V_{CEsat-1}$ | Collector-emitter saturation voltage | | $I_C$=-5A;$I_B$=-0.5A | | | -1.3 | V |
| $V_{CEsat-2}$ | Collector-emitter saturation voltage | | $I_C$=-15A;$I_B$=-5A | | | -3.5 | V |
| $V_{BE-1}$ | Base-emitter on voltage | | $I_C$=-5A ; $V_{CE}$=-4V | | | -1.3 | V |
| $V_{BE-2}$ | Base-emitter on voltage | | $I_C$=-15A ; $V_{CE}$=-4V | | | -3.5 | V |
| $I_{CEX}$ | Collector cut-off current $V_{BE}$=-1.5V | 2N6489 | $V_{CE}$=-45V;<br>$V_{CE}$=-40V;$T_C$=150℃ | | | -0.5<br>-5.0 | mA |
| | | 2N6490 | $V_{CE}$=-65V;<br>$V_{CE}$=-60V;$T_C$=150℃ | | | -0.5<br>-5.0 | |
| | | 2N6491 | $V_{CE}$=-85V;<br>$V_{CE}$=-80V;$T_C$=150℃ | | | -0.5<br>-5.0 | |
| $I_{CEO}$ | Collector cut-off current | 2N6489 | $V_{CE}$=-20V;$I_B$=0 | | | -1.0 | mA |
| | | 2N6490 | $V_{CE}$=-30V;$I_B$=0 | | | | |
| | | 2N6491 | $V_{CE}$=-40V;$I_B$=0 | | | | |
| $I_{EBO}$ | Emitter cut-off current | | $V_{EB}$=-5V; $I_C$=0 | | | -1.0 | mA |
| $h_{FE-1}$ | DC current gain | | $I_C$=-5A ; $V_{CE}$=-4V | 20 | | 150 | |
| $h_{FE-2}$ | DC current gain | | $I_C$=-15A ; $V_{CE}$=-4V | 5 | | | |

# Silicon PNP Power Transistors 2N6489 2N6490 2N6491

**PACKAGE OUTLINE**

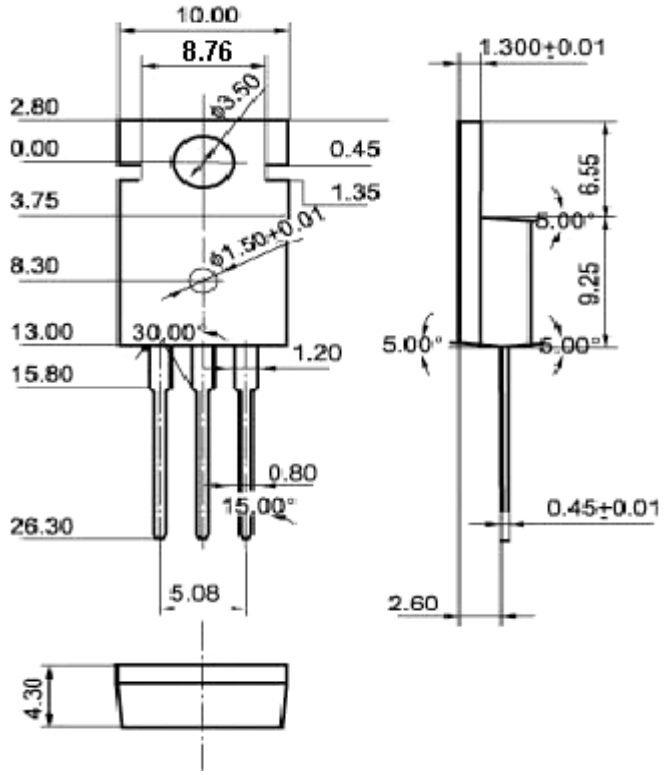


**Fig.2 Outline dimensions(unindicated tolerance:±0.10 mm)**