# NPN SILICON PLANAR TRANSISTORS

**BC107/A/B/C**
**BC108/A/B/C**
**BC109/A/B/C**

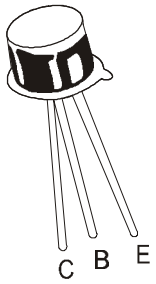


**TO-18**
**Metal Can Package**

## Low Noise General Purpose Audio Amplifiers

### ABSOLUTE MAXIMUM RATINGS

| DESCRIPTION | SYMBOL | BC107 | BC108 | BC109 | UNIT |
|---|---|---|---|---|---|
| Collector Emitter Voltage | $V_{CEO}$ | 45 | 25 | 25 | V |
| Collector Base Voltage | $V_{CBO}$ | 50 | 30 | 30 | V |
| Emitter Base Voltage | $V_{EBO}$ | 6.0 | 5.0 | 5.0 | V |
| Collector Current Continuous | $I_C$ | 200 | | | mA |
| Power Dissipation at $T_a$=25ºC | $P_D$ | 300 | | | mW |
| Derate above 25ºC | | 1.72 | | | mW/ ºC |
| Power Dissipation at $T_c$=25ºC | $P_D$ | 750 | | | mW |
| Derate above 25ºC | | 4.29 | | | mW/ ºC |
| Operating And Storage Junction Temperature Range | $T_j$, $T_{stg}$ | - 65 to +200 | | | ºC |

### THERMAL CHARACTERISTICS

| | | | |
|---|---|---|---|
| Junction to Ambient in free air | $R_{th\ (j\text{-}a)}$ | 583 | ºC/W |
| Junction to Case | $R_{th\ (j\text{-}c)}$ | 233 | ºC/W |

### ELECTRICAL CHARACTERISTICS ($T_a$=25ºC unless specified otherwise )

| DESCRIPTION | SYMBOL | TEST CONDITION | BC107 | BC108 | BC109 | UNIT |
|---|---|---|---|---|---|---|
| Collector Emitter Voltage | $V_{CEO}$ | $I_C$=2mA, $I_{B=}$0 | >45 | >25 | >25 | V |
| Emitter Base Voltage | $V_{EBO}$ | $I_E$=10µA, $I_C$=0 | >6 | >5 | >5 | V |
| Collector Cut Off Current | $I_{CBO}$ | $V_{CB}$=45V, $I_E$=0 | <15 | | | nA |
| | | $V_{CB}$=25V, $I_E$=0 | | <15 | <15 | nA |
| | | $V_{CB}$=45V, $I_E$=0, $T_a$=125ºC | <4 | | | µA |
| | | $V_{CB}$=25V, $I_E$=0, $T_a$=125ºC | | <4 | <4 | µA |
| DC Current Gain | $h_{FE}$ | $I_C$=10µA, $V_{CE}$=5V | | | | |
| | | **B Group** | | >40 | | |
| | | **C Group** | | >100 | | |
| | | $I_C$=2mA, $V_{CE}$=5V | | | | |
| | | **BC107** | | 110-450 | | |
| | | **BC108** | | 110-800 | | |
| | | **BC109** | | 200-800 | | |
| | | **A Group** | | 110-220 | | |
| | | **B Group** | | 200-450 | | |
| | | **C Group** | | 420-800 | | |

BC107_109Rev_3 231202E

## NPN SILICON PLANAR TRANSISTORS

**BC107/A/B/C**
**BC108/A/B/C**
**BC109/A/B/C**

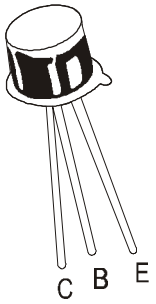


**TO-18**
**Metal Can Package**

**ELECTRICAL CHARACTERISTICS ($T_a$=25ºC unless specified otherwise)**

| DESCRIPTION | SYMBOL | TEST CONDITION | MIN | TYP | MAX | UNIT |
|---|---|---|---|---|---|---|
| **Collector Emitter Saturation Voltage** | $V_{CE\ (sat)}$ | $I_C$=10mA, $I_B$=0.5mA | | | 0.25 | V |
| | | $I_C$=100mA, $I_B$=5mA | | | 0.60 | V |
| **Base Emitter Saturation Voltage** | $V_{BE\ (sat)}$ | $I_C$=10mA, $I_B$=0.5mA | | | 0.83 | V |
| | | $I_C$=100mA, $I_B$=5mA | | | 1.05 | V |
| **Base Emitter On Voltage** | $V_{BE\ (on)}$ | $I_C$=2mA, $V_{CE}$=5V | 0.55 | | 0.70 | V |
| | | $I_C$=10mA, $V_{CE}$=5V | | | 0.77 | V |
| **Collector Knee Voltage** | $V_{CE\ (K)}$ | $I_C$=10mA, $I_B$=the value for which $I_C$=11mA at $V_{CE}$=1V | | | 0.60 | V |
| **Transition frequency** | $f_T$ | $I_C$=10mA, $V_{CE}$=5V, f=100MHz | 150 | | | MHz |
| **Output Capacitance** | $C_{obo}$ | $V_{CB}$=10V, $I_E$=0, f=1MHz | | | 4.5 | pF |
| **Noise Figure** | NF | $I_C$=0.2mA, $V_{CE}$=5V, Rg=2KΩ, | | | | |
| | | f=30Hz to 15KHz **BC109** | | | 4.0 | dB |
| | | f=1KHz, ΔF=200Hz, **BC109** | | | 4.0 | dB |
| | | **BC107/108** | | | 10 | dB |

**SMALL SIGNAL CHARACTERISTICS**

| DESCRIPTION | SYMBOL | TEST CONDITION | MIN | TYP | MAX | UNIT |
|---|---|---|---|---|---|---|
| **Small Signal Current Gain** | $h_{fe}$ | $I_C$=2mA, $V_{CE}$=5V, f=1KHz | | | | |
| | | **BC107** | 125 | | 500 | |
| | | **BC108** | 125 | | 900 | |
| | | **BC109** | 240 | | 900 | |
| | | **A Group** | 125 | | 260 | |
| | | **B Group** | 240 | | 500 | |
| | | **C Group** | 450 | | 900 | |
| **Input Impedance** | $h_{ie}$ | $I_C$=2mA, $V_{CE}$=5V, f=1KHz | | | | |
| | | **A Group** | 1.6 | | 4.5 | KΩ |
| | | **B Group** | 3.2 | | 8.5 | KΩ |
| | | **C Group** | 6.0 | | 15 | KΩ |
| **Output Admittance** | $h_{oe}$ | $I_C$=2mA, $V_{CE}$=5V, f=1KHz | | | | |
| | | **A Group** | | | 30 | μmhos |
| | | **B Group** | | | 60 | μmhos |
| | | **C Group** | | | 110 | μmhos |

BC107_109Rev_3 231202E

## TO-18 Metal Can Package

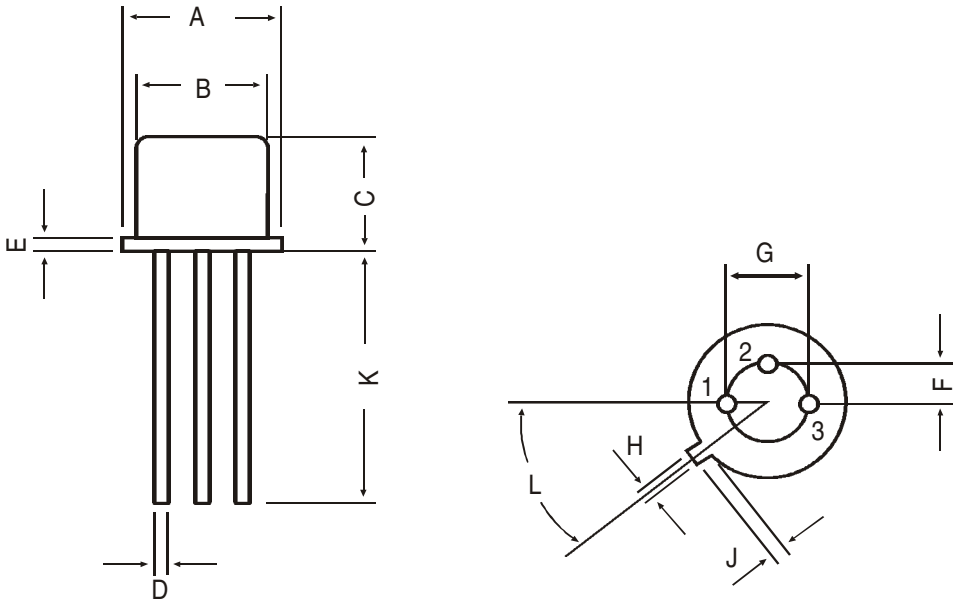


All diminsions in mm.

| DIM | MIN | MAX |
|---|---|---|
| A | 5.24 | 5.84 |
| B | 4.52 | 4.97 |
| C | 4.31 | 5.33 |
| D | 0.40 | 0.53 |
| E | — | 0.76 |
| F | — | 1.27 |
| G | — | 2.97 |
| H | 0.91 | 1.17 |
| J | 0.71 | 1.21 |
| K | 12.70 | — |
| L | 45 DEG | |

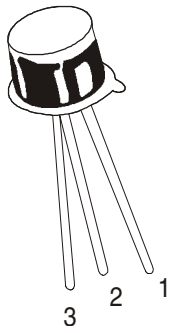


PIN CONFIGURATION
1. EMITTER
2. BASE
3. COLLECTOR

## Packing Detail

| PACKAGE | STANDARD PACK | | INNER CARTON BOX | | OUTER CARTON BOX | | |
|---|---|---|---|---|---|---|---|
| | Details | Net Weight/Qty | Size | Qty | Size | Qty | Gr Wt |
| TO-18 | 1K/polybag | 350 gm/1K pcs | 3" x 7.5" x 7.5" | 5K | 17" x 15" x 13.5" | 80K | 34 kgs |

### Component Disposal Instructions

1. CDIL Semiconductor Devices are RoHS compliant, customers are requested to please dispose as per prevailing Environmental Legislation of their Country.
2. In Europe, please dispose as per EU Directive 2002/96/EC on Waste Electrical and Electronic Equipment (WEEE).

## Disclaimer

The product information and the selection guides facilitate selection of the CDIL's Semiconductor Device(s) best suited for application in your product(s) as per your requirement. It is recommended that you completely review our Data Sheet(s) so as to confirm that the Device(s) meet functionality parameters for your application. The information furnished in the Data Sheet and on the CDIL Web Site/CD are believed to be accurate and reliable. CDIL however, does not assume responsibility for inaccuracies or incomplete information. Furthermore, CDIL does not assume liability whatsoever, arising out of the application or use of any CDIL product; neither does it convey any license under its patent rights nor rights of others. These products are not designed for use in life saving/support appliances or systems. CDIL customers selling these products (either as individual Semiconductor Devices or incorporated in their end products), in any life saving/support appliances or systems applications do so at their own risk and CDIL will not be responsible for any damages resulting from such sale(s).

CDIL strives for continuous improvement and reserves the right to change the specifications of its products without prior notice.

CDIL is a registered Trademark of
Continental Device India Limited
C-120 Naraina Industrial Area, New Delhi 110 028, India.
Telephone + 91-11-2579 6150, 4141 1112 Fax + 91-11-2579 5290, 4141 1119
email@cdil.com www.cdilsemi.com