International
IOR Rectifier

PD - 9.1346B

IRLZ44N

HEXFET® Power MOSFET

- Logic-Level Gate Drive
- Advanced Process Technology
- Dynamic dv/dt Rating
- 175°C Operating Temperature
- Fast Switching
- Fully Avalanche Rated

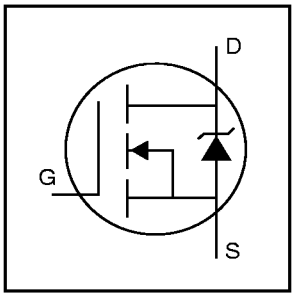

V_{DSS} = 55V

$R_{DS(on)}$ = 0.022Ω

I_D = 47A

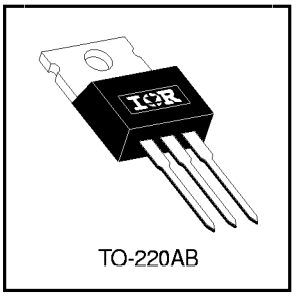

TO-220AB

Description

Fifth Generation HEXFETs from International Rectifier utilize advanced processing techniques to achieve the lowest possible on-resistance per silicon area. This benefit, combined with the fast switching speed and ruggedized device design that HEXFET Power MOSFETs are well known for, provides the designer with an extremely efficient device for use in a wide variety of applications.

The TO-220 package is universally preferred for all commercial-industrial applications at power dissipation levels to approximately 50 watts. The low thermal resistance and low package cost of the TO-220 contribute to its wide acceptance throughout the industry.

Absolute Maximum Ratings

	Parameter	Max.	Units
I_D @ T_C = 25°C	Continuous Drain Current, V_{GS} @ 10V	47	A
I_D @ T_C = 100°C	Continuous Drain Current, V_{GS} @ 10V	33	
I_{DM}	Pulsed Drain Current ①	160	
P_D @T_C = 25°C	Power Dissipation	110	W
	Linear Derating Factor	0.71	W/°C
V_{GS}	Gate-to-Source Voltage	±16	V
E_{AS}	Single Pulse Avalanche Energy ②	210	mJ
I_{AR}	Avalanche Current①	25	A
E_{AR}	Repetitive Avalanche Energy①	11	mJ
dv/dt	Peak Diode Recovery dv/dt ③	5.0	V/ns
T_J	Operating Junction and	-55 to + 175	°C
T_{STG}	Storage Temperature Range		
	Soldering Temperature, for 10 seconds	300 (1.6mm from case)	
	Mounting torque, 6-32 or M3 screw.	10 lbf•in (1.1N•m)	

Thermal Resistance

	Parameter	Min.	Typ.	Max.	Units
$R_{\theta JC}$	Junction-to-Case	——	——	1.4	°C/W
$R_{\theta CS}$	Case-to-Sink, Flat, Greased Surface	——	0.50	——	
$R_{\theta JA}$	Junction-to-Ambient	——	——	62	

Electrical Characteristics @ T_J = 25°C (unless otherwise specified)

	Parameter	Min.	Typ.	Max.	Units	Conditions
$V_{(BR)DSS}$	Drain-to-Source Breakdown Voltage	55	—	—	V	V_{GS} = 0V, I_D = 250µA
$\Delta V_{(BR)DSS}/\Delta T_J$	Breakdown Voltage Temp. Coefficient	—	0.070	—	V/°C	Reference to 25°C, I_D = 1mA
$R_{DS(on)}$	Static Drain-to-Source On-Resistance	—	—	0.022	Ω	V_{GS} = 10V, I_D = 25A ④
		—	—	0.025		V_{GS} = 5.0V, I_D = 25A ④
		—	—	0.035		V_{GS} = 4.0V, I_D = 21A ④
$V_{GS(th)}$	Gate Threshold Voltage	1.0	—	2.0	V	V_{DS} = V_{GS}, I_D = 250µA
g_{fs}	Forward Transconductance	21	—	—	S	V_{DS} = 25V, I_D = 25A
I_{DSS}	Drain-to-Source Leakage Current	—	—	25	µA	V_{DS} = 55V, V_{GS} = 0V
		—	—	250		V_{DS} = 44V, V_{GS} = 0V, T_J = 150°C
I_{GSS}	Gate-to-Source Forward Leakage	—	—	100	nA	V_{GS} = 16V
	Gate-to-Source Reverse Leakage	—	—	-100		V_{GS} = -16V
Q_g	Total Gate Charge	—	—	48	nC	I_D = 25A
Q_{gs}	Gate-to-Source Charge	—	—	8.6		V_{DS} = 44V
Q_{gd}	Gate-to-Drain ("Miller") Charge	—	—	25		V_{GS} = 5.0V, See Fig. 6 and 13 ④
$t_{d(on)}$	Turn-On Delay Time	—	11	—	ns	V_{DD} = 28V
t_r	Rise Time	—	84	—		I_D = 25A
$t_{d(off)}$	Turn-Off Delay Time	—	26	—		R_G = 3.4Ω, V_{GS} = 5.0V
t_f	Fall Time		15			R_D = 1.1Ω, See Fig. 10 ④
L_D	Internal Drain Inductance	—	4.5	—	nH	Between lead, 6mm (0.25in.) from package and center of die contact
L_S	Internal Source Inductance	—	7.5	—		
C_{iss}	Input Capacitance	—	1700	—	pF	V_{GS} = 0V
C_{oss}	Output Capacitance	—	400	—		V_{DS} = 25V
C_{rss}	Reverse Transfer Capacitance	—	150	—		f = 1.0MHz, See Fig. 5

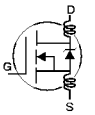

Source-Drain Ratings and Characteristics

	Parameter	Min.	Typ.	Max.	Units	Conditions
I_S	Continuous Source Current (Body Diode)	—	—	47	A	MOSFET symbol showing the integral reverse p-n junction diode.
I_{SM}	Pulsed Source Current (Body Diode) ①	—	—	160		
V_{SD}	Diode Forward Voltage	—	—	1.3	V	T_J = 25°C, I_S = 25A, V_{GS} = 0V ④
t_{rr}	Reverse Recovery Time	—	80	120	ns	T_J = 25°C, I_F = 25A
Q_{rr}	Reverse RecoveryCharge	—	210	320	nC	di/dt = 100A/µs ④
t_{on}	Forward Turn-On Time	Intrinsic turn-on time is negligible (turn-on is dominated by L_S+L_D)				

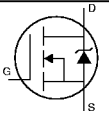

Notes:

① Repetitive rating; pulse width limited by max. junction temperature. (See fig. 11)

② V_{DD} = 25V, starting T_J = 25°C, L = 470µH R_G = 25Ω, I_{AS} = 25A. (See Figure 12)

③ I_{SD} ≤ 25A, di/dt ≤ 270A/µs, V_{DD} ≤ $V_{(BR)DSS}$, T_J ≤ 175°C

④ Pulse width ≤ 300µs; duty cycle ≤ 2%.

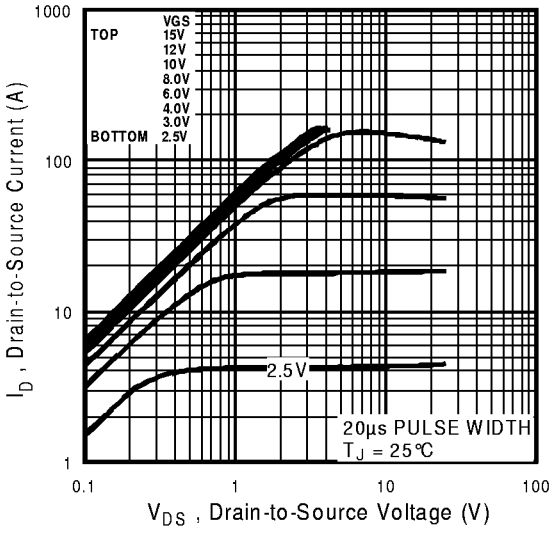

Fig 1. Typical Output Characteristics

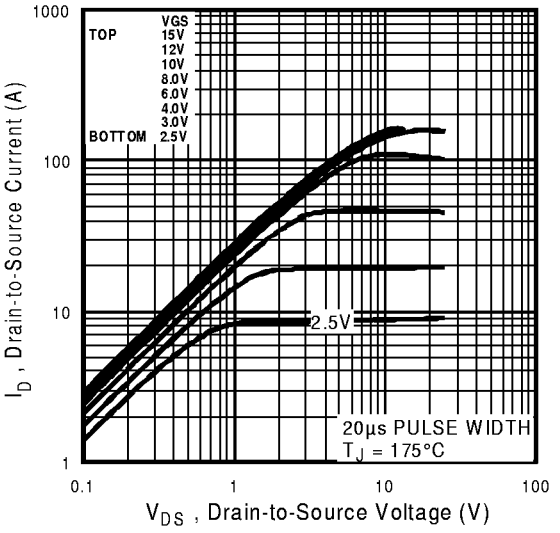

Fig 2. Typical Output Characteristics

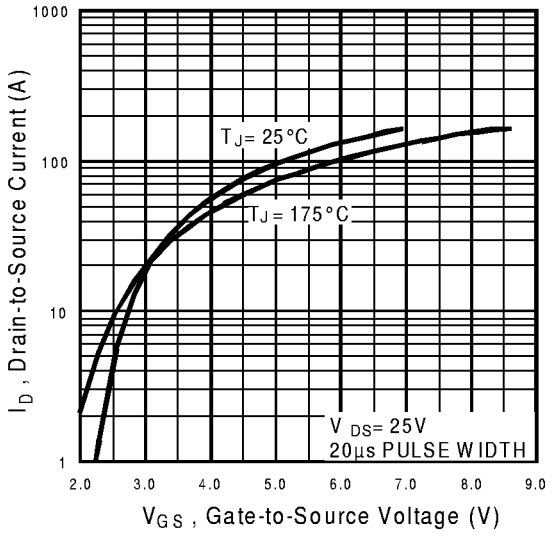

Fig 3. Typical Transfer Characteristics

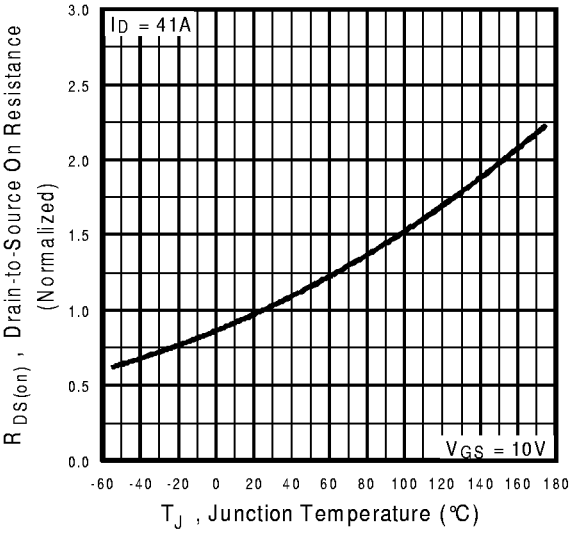

Fig 4. Normalized On-Resistance Vs. Temperature

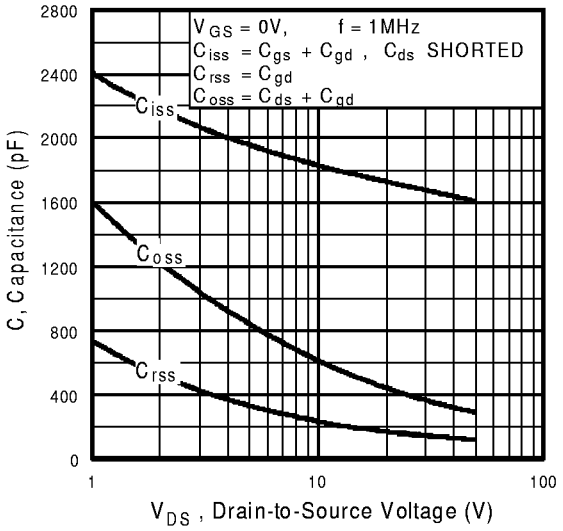

Fig 5. Typical Capacitance Vs. Drain-to-Source Voltage

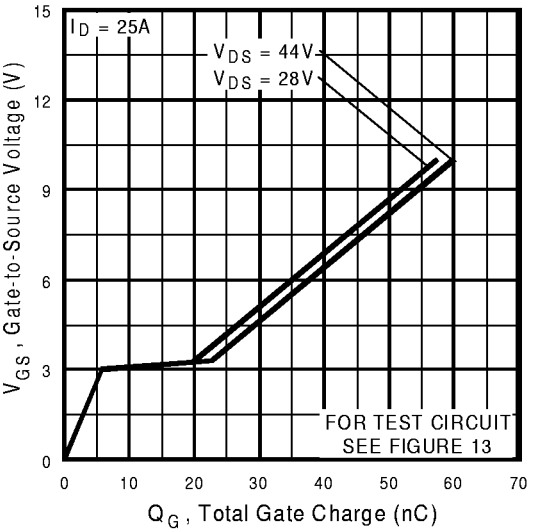

Fig 6. Typical Gate Charge Vs. Gate-to-Source Voltage

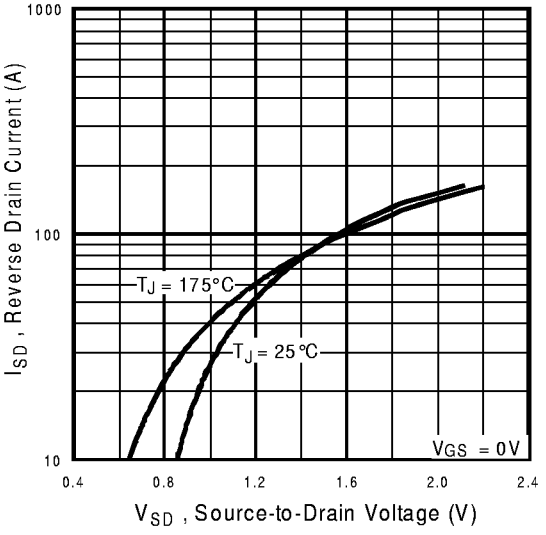

Fig 7. Typical Source-Drain Diode Forward Voltage

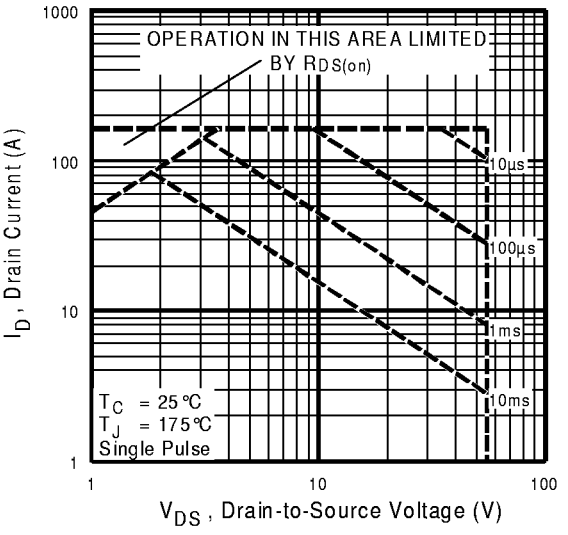

Fig 8. Maximum Safe Operating Area

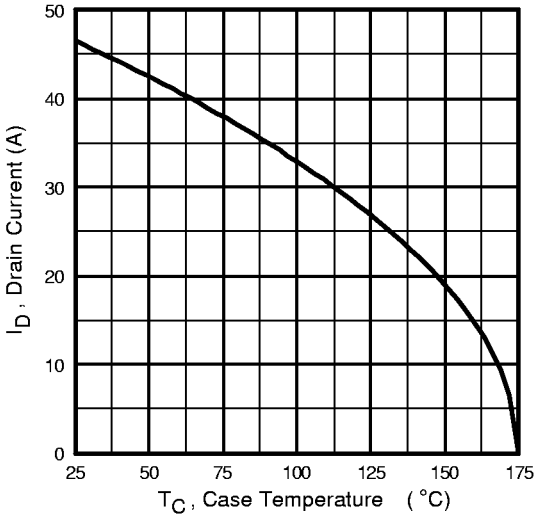

Fig 9. Maximum Drain Current Vs. Case Temperature

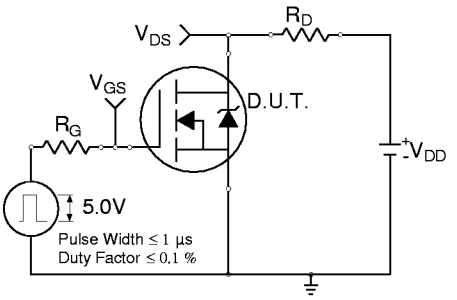

Fig 10a. Switching Time Test Circuit

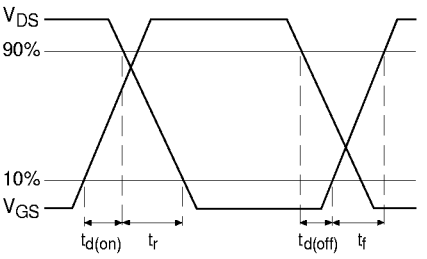

Fig 10b. Switching Time Waveforms

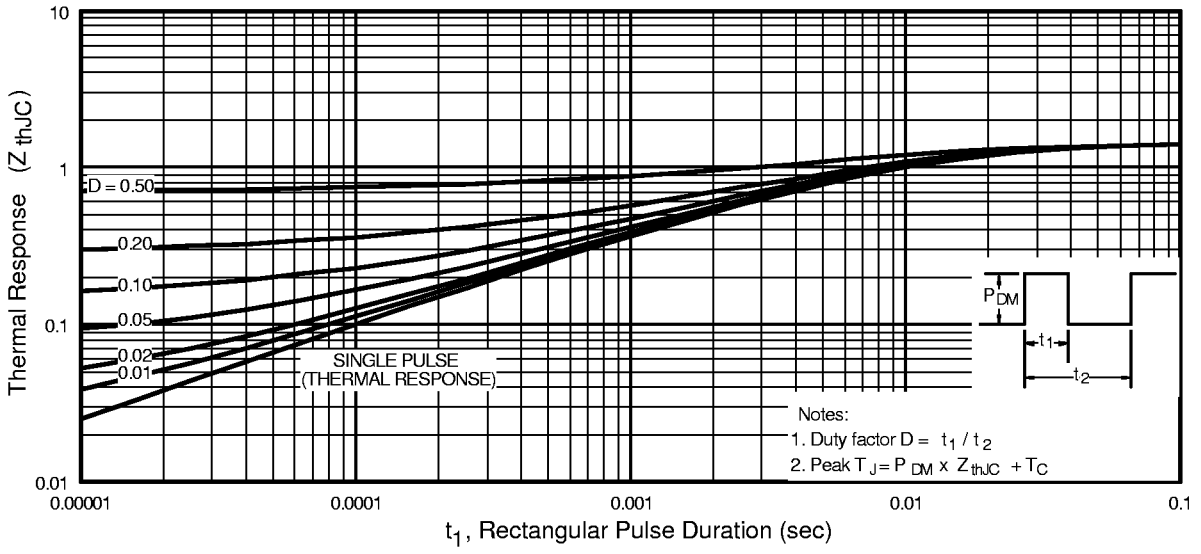

Fig 11. Maximum Effective Transient Thermal Impedance, Junction-to-Case

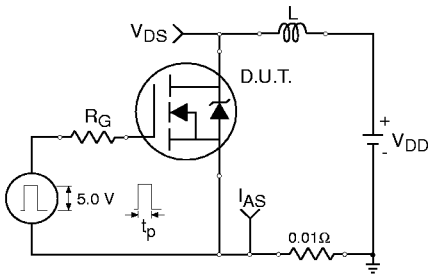

Fig 12a. Unclamped Inductive Test Circuit

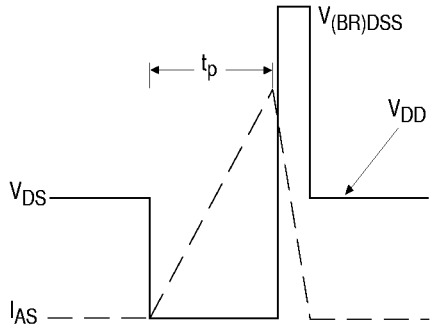

Fig 12b. Unclamped Inductive Waveforms

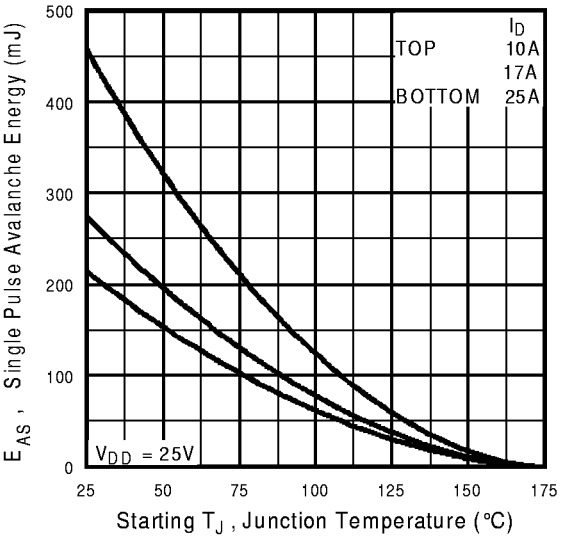

Fig 12c. Maximum Avalanche Energy Vs. Drain Current

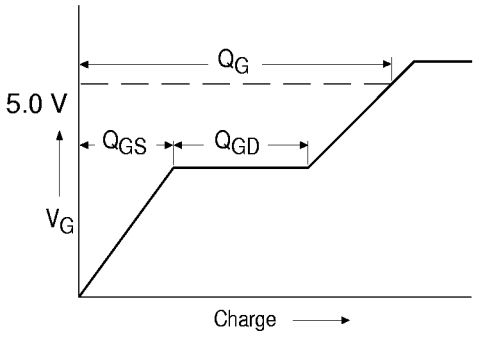

Fig 13a. Basic Gate Charge Waveform

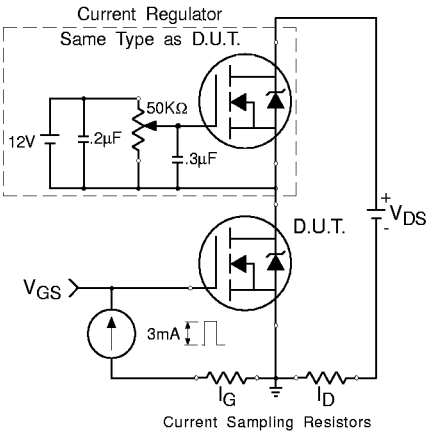

Fig 13b. Gate Charge Test Circuit

Peak Diode Recovery dv/dt Test Circuit

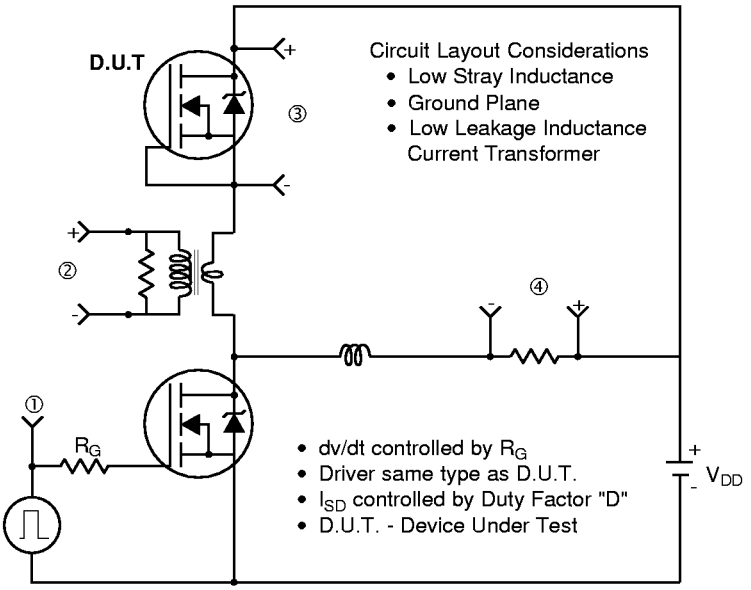

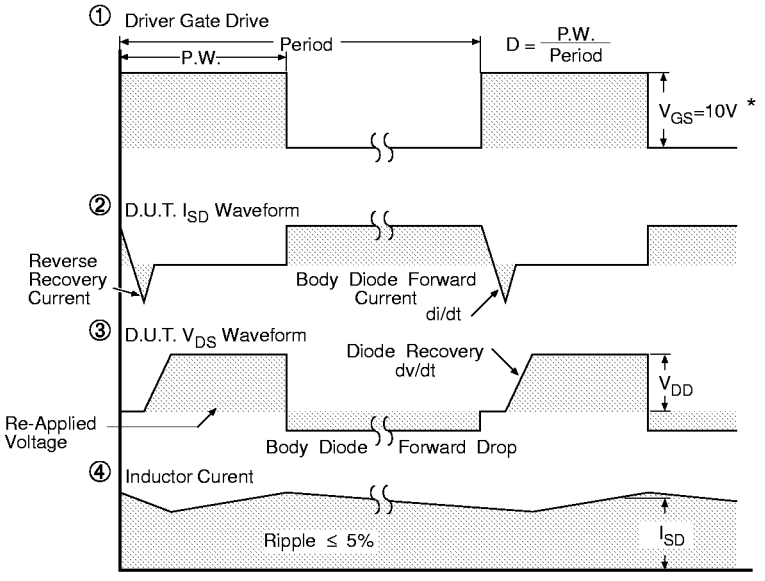

* V_{GS} = 5V for Logic Level Devices

Fig 14. For N-Channel HEXFETS

Package Outline

TO-220AB Outline

Dimensions are shown in millimeters (inches)

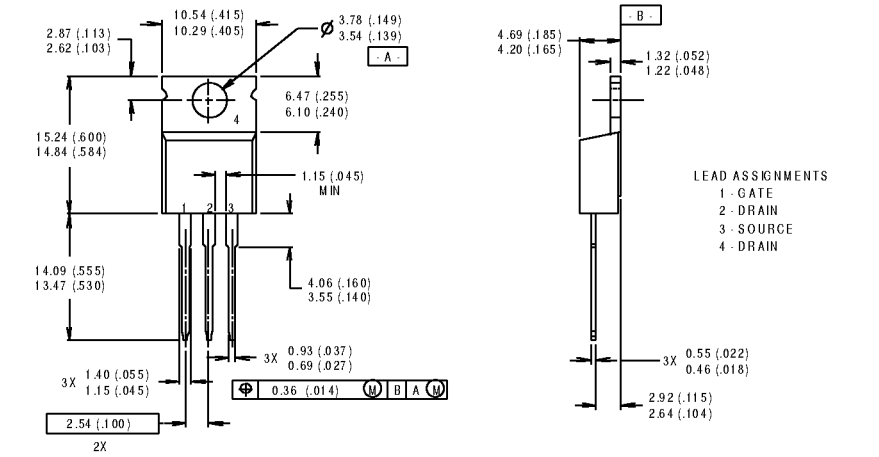

NOTES:

1 DIMENSIONING & TOLERANCING PER ANSI Y14.5M, 1982.
2 CONTROLLING DIMENSION : INCH
3 OUTLINE CONFORMS TO JEDEC OUTLINE TO-220-AB.
4 HEATSINK & LEAD MEASUREMENTS DO NOT INCLUDE BURRS.

Part Marking Information

TO-220AB

EXAMPLE : THIS IS AN IRF1010
WITH ASSEMBLY
LOT CODE 9B1M

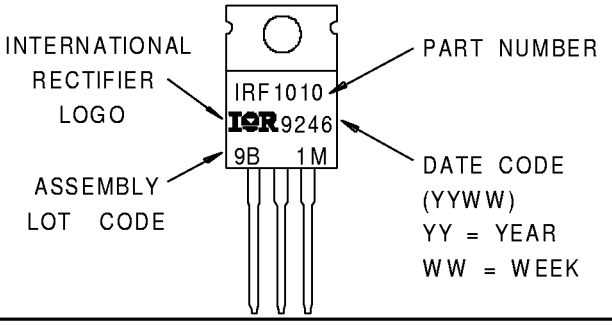

International
IOR Rectifier

WORLD HEADQUARTERS: 233 Kansas St., El Segundo, California 90245, Tel: (310) 322 3331
EUROPEAN HEADQUARTERS: Hurst Green, Oxted, Surrey RH8 9BB, UK Tel: ++ 44 1883 732020
IR CANADA: 7321 Victoria Park Ave., Suite 201, Markham, Ontario L3R 2Z8, Tel: (905) 475 1897
IR GERMANY: Saalburgstrasse 157, 61350 Bad Homburg Tel: ++ 49 6172 96590
IR ITALY: Via Liguria 49, 10071 Borgaro, Torino Tel: ++ 39 11 451 0111
IR FAR EAST: K&H Bldg., 2F, 30-4 Nishi-Ikebukuro 3-Chome, Toshima-Ku, Tokyo Japan 171 Tel: 81 3 3983 0086
IR SOUTHEAST ASIA: 315 Outram Road, #10-02 Tan Boon Liat Building, Singapore 0316 Tel: 65 221 8371