NPN SILICON PLANAR EPITAXIAL TRANSISTORS

BC546,A, B, C
BC547, A, B, C
BC548, A, B, C

TO-92 Plastic Package

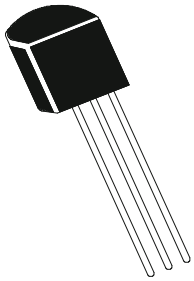

General Purpose Transistors

ABSOLUTE MAXIMUM RATINGS(Ta=25 deg C unless otherwise specified)

DESCRIPTION	SYMBOL		BC546	BC547	BC548	UNITS
Collector Emitter Voltage	V_{CEO}		65	45	30	V
Collector Emitter Voltage	V_{CES}		80	50	30	V
Collector Base Voltage	V_{CBO}		80	50	30	V
Emitter Base Voltage	V_{EBO}		6	6	5	V
Collector Current Continuous	I_C			100		mA
Peak	I_{CM}			200		mA
Base Current - Peak	I_{BM}			200		mA
Emitter Current - Peak	I_{EM}			200		mA
Power Dissipation@ Ta=25 degC	P_{tot}			500		mW
Operating And Storage Junction	T_j, T_{stg}		-55 to +150			^oC
Temperature Range						

THERMAL RESISTANCE

Junction to ambient	$R_{th(j-a)}$			250		ºC/W

ELECTRICAL CHARACTERISTICS (Ta=25 deg C Unless Otherwise Specified)

DESCRIPTION	SYMBOL	TEST CONDITION	MIN	TYP	MAX	UNITS
Collector Emitter Voltage						
BC546	V_{CEO}	I_C=1mA,I_B=0	65			V
BC547			45			V
BC548			30			V
Collector Base Voltage						
BC546	V_{CBO}	I_C=100uA,I_E=0	80			V
BC547			50			V
BC548			30			V

NPN SILICON PLANAR EPITAXIAL TRANSISTORS

BC546,A, B, C
BC547, A, B, C
BC548, A, B, C

TO-92 Plastic Package

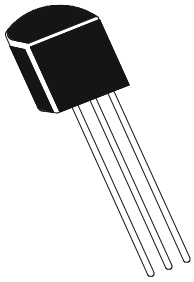

DESCRIPTION	SYMBOL	TEST CONDITION	MIN	TYP	MAX	UNITS
Emitter Base Voltage						
BC546, BC547	V_{EBO}	I_E=10uA, I_C=0	6			V
BC548			5			V
Collector Cut off Current	I_{CBO}	V_{CB}=30V, I_E = 0			15	nA
		V_{CB}=30V, I_E = 0			5	uA
		Tj= 150 deg C				
Collector Cut off Current						
BC546	I_{CES}	V_{CE}=80V		0.2	15	nA
BC547		V_{CE}=50V		0.2	15	nA
BC548		V_{CE}=30V		0.2	15	nA
BC546		V_{CE}=80V,Tj=125º C			4	uA
BC547		V_{CE}=50V,Tj=125ºC			4	uA
BC548		V_{CE}=30V,Tj=125ºC			4	uA
DC Current Gain						
A	h_{FE}	V_{CE}=5V,I_C=10uA		90		
B				150		
C				270		
BC546		V_{CE}=5V,I_C=2mA	110		450	
BC547, BC548			110		800	
A			110	180	220	
B			200	290	450	
C			420	520	800	
A		V_{CE}=5V,I_C=100mA		120		
B				200		
C				400		
Collector Emitter Saturation Voltage						
	$V_{CE(sat)}$	I_C=10mA,I_B=0.5mA		0.09	0.25	V
		I_C=10mA,I_B=5mA		0.2	0.6	V
		I_C=100mA,I_B=see note (1)		0.3	0.6	V
Base Emitter Saturation Voltage	$V_{BE(sat)}$	I_C=10mA,I_B=0.5mA		0.7		V
		I_C=100mA,I_B=5mA		0.9		V
Base Emitter On Voltage	$V_{BE(on)}$	I_C=2mA,V_{CE}=5V	0.55	0.66	0.7	V
		I_C=10mA,V_{CE}=5V			0.77	V

NPN SILICON PLANAR EPITAXIAL TRANSISTORS

BC546,A, B, C
BC547, A, B, C
BC548, A, B, C

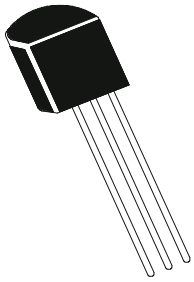

TO-92 Plastic Package

ELECTRICAL CHARACTERISTICS (Ta=25 deg C Unless Otherwise Specified)

DESCRIPTION

DYNAMICS CHARACTERISTICS	SYMBOL	TEST CONDITION	MIN	TYP	MAX	UNITS
Transition Frequency	f_T	I_C=10mA, V_{CE}=5V				
		f=100MHz		300		MHz
Collector output Capacitance	C_{cbo}	V_{CB} =10V, f =1MH_Z		1.7	4.5	pF
Emitter input Capacitance	C_{ib}	V_{EB} =0.5V, f =1MH_Z		9.00		pF
Noise Figure	NF	V_{CE} =5V,I_C=0.2mA		2	10	dB
		R_S=2KΩ,f=1K$H_{Z,}$				
		B =200H_Z				
Small Signal Current Gain						
A	h_{fe}	V_{CE} =5V,I_C=2mA		220		
B		f=1kH_Z		330		
C				600		
Input Impedance						
A	h_{ie}	V_{CE} =5V,I_C=2mA	1.6	2.7	4.5	kΩ
B		f=1kH_Z	3.2	4.5	8.5	
C			6	8.7	15	
Voltage Feedback						
A	h_{re}	V_{CE} =5V,I_C=2mA		1.5		x10
B		f=1kH_Z		2		
C				3		
DYNAMICS CHARACTERISTICS	**SYMBOL**	**TEST CONDITION**	**MIN**	**TYP**	**MAX**	**UNITS**
Output Admittance						
A	h_{oe}	V_{CE} =5V,I_C=2mA		18	30	u MHO
B		f=1kH_Z		30	60	
C				60	110	

NOTE(1) : I_B is value for which I_C = 11mA @ V_{CE} =10V

TO-92 Plastic Package

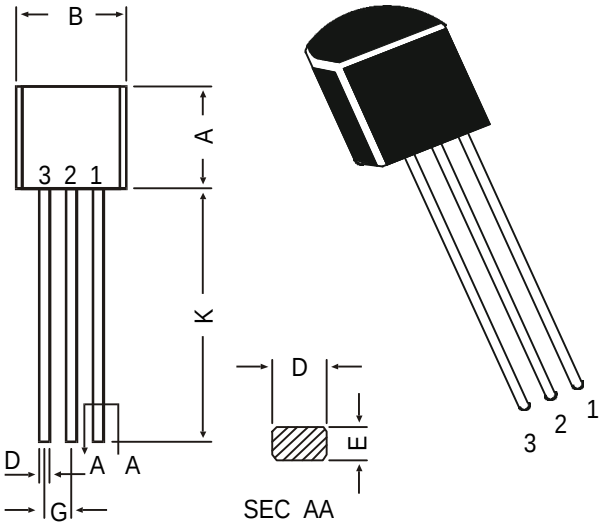

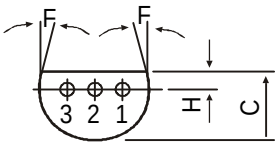

PIN CONFIGURATION
1. COLLECTOR
2. BASE
3. EMITTER

All diminsions in mm.

DIM	MIN.	MAX.
A	4.32	5.33
B	4.45	5.20
C	3.18	4.19
D	0.41	0.55
E	0.35	0.50
F	5 DEG	
G	1.14	1.40
H	1.14	1.53
K	12.70	—

TO-92 Transistors on Tape and Ammo Pack

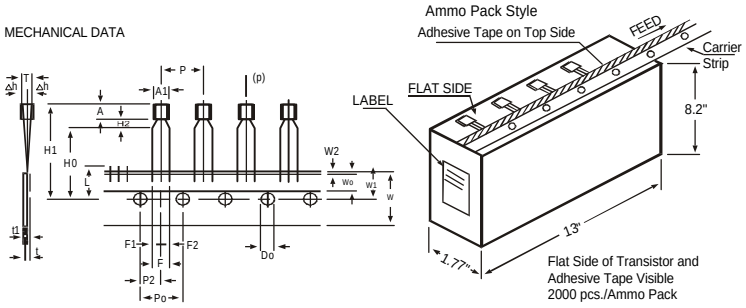

All dimensions in mm unless specified otherwise

ITEM	SYMBOL	SPECIFICATION				REMARKS
		MIN.	NOM.	MAX.	TOL .	
BODY WIDTH	A1	4.0		4.8		
BODY HEIGHT	A	4.8		5.2		
BODY THICKNESS	T	3.9		4.2		
PITCH OF COMPONENT	P		12.7		±1	
FEED HOLE PITCH	Po		12.7		±0.3	CUMULATIVE PITCH ERROR 1.0 mm/20 PITCH
FEED HOLE CENTRE TO COMPONENT CENTRE	P2		6.35		±0.4	TO BE MEASURED AT BOTTOM OF CLINCH
DISTANCE BETWEEN OUTER LEADS	F		5.08		+0.6 -0.2	
COMPONENT ALIGNMENT	△h		0	1		AT TOP OF BODY
TAPE WIDTH	W		18		±0.5	
HOLD-DOWN TAPE WIDTH	Wo		6		±0.2	
HOLE POSITION	W1		9		+0.7 -0.5	
HOLD-DOWN TAPE POSITION	W2		0.5		±0.2	
LEAD WIRE CLINCH HEIGHT	Ho		16		±0.5	
COMPONENT HEIGHT	H1			23.25		
LENGTH OF SNIPPED LEADS	L			11.0		
FEED HOLE DIAMETER	Do		4		±0.2	
TOTAL TAPE THICKNESS	t			1.2		t1 0.3 - 0.6
LEAD - TO - LEAD DISTANCEF1,	F2		2.54		+0.4 -0.1	
CLINCH HEIGHT	H2			3		
PULL - OUT FORCE	(P)	6N				

NOTES
1. MAXIMUM ALIGNMENT DEVIATION BETWEEN LEADS NOT TO BE GREATER THAN 0.2 mm.
2. MAXIMUM NON-CUMULATIVE VARIATION BETWEEN TAPE FEED HOLES SHALL NOT EXCEED 1 mm IN 20 PITCHES.
3. HOLDDOWN TAPE NOT TO EXCEED BEYOND THE EDGE(S) OF CARRIER TAPE AND THERE SHALL BE NO EXPOSURE OF ADHESIVE.
4. NO MORE THAN 3 CONSECUTIVE MISSING COMPONENTS ARE PERMITTED.
5. A TAPE TRAILER, HAVING AT LEAST THREE FEED HOLES ARE REQUIRED AFTER THE LAST COMPONENT.
6. SPLICES SHALL NOT INTERFERE WITH THE SPROCKET FEED HOLES.

Packing Detail

PACKAGE	STANDARD PACK		INNER CARTON BOX		OUTER CARTON BOX		
	Details	Net Weight/Qty	Size	Qty	Size	Qty	Gr Wt
TO-92 Bulk	1K/polybag	200 gm/1K pcs	3" x 7.5" x 7.5"	5.0K	17" x 15" x 13.5"	80.0K	23 kgs
TO-92 T&A	2K/ammo box	645 gm/2K pcs	12.5" x 8" x 1.8"	2.0K	17" x 15" x 13.5"	32.0K	12.5 kgs

Disclaimer

The product information and the selection guides facilitate selection of the CDIL's Discrete Semiconductor Device(s) best suited for application in your product(s) as per your requirement. It is recommended that you completely review our Data Sheet(s) so as to confirm that the Device(s) meet functionality parameters for your application. The information furnished on the CDIL Web Site/CD is believed to be accurate and reliable. CDIL however, does not assume responsibility for inaccuracies or incomplete information. Furthermore, CDIL does not assume liability whatsoever, arising out of the application or use of any CDIL product; neither does it convey any license under its patent rights nor rights of others. These products are not designed for use in life saving/support appliances or systems. CDIL customers selling these products (either as individual Discrete Semiconductor Devices or incorporated in their end products), in any life saving/support appliances or systems or applications do so at their own risk and CDIL will not be responsible for any damages resulting from such sale(s).

CDIL strives for continuous improvement and reserves the right to change the specifications of its products without prior notice.

CDIL is a registered Trademark of
Continental Device India Limited
C-120 Naraina Industrial Area, New Delhi 110 028, India.
Telephone + 91-11-579 6150 Fax + 91-11-579 9569, 579 5290
e-mail sales@cdil.com www.cdil.com

This datasheet has been downloaded from:

www.DatasheetCatalog.com

Datasheets for electronic components.