Small Signal Product

NPN Transistor

FEATURES

- For switching and AF amplifier applications
- These types are subdivided into three groups A, B and C according to their current gain
- Moisture sensitivity level 1
- Driver transistor
- Pb free and RoHS compliant
- Green compound (Halogen free) with suffix "G" on packing code and prefix "G" on date code



1. Collector 2. Base 3. Emitter
TO-92 Plastic Package

TO-92

Pb-Free

RoHS COMPLIANT

MECHANICAL DATA

- Case: TO-92 small outline plastic package
- Terminal: Matte tin plated, lead free, solderable per MIL-STD-202, Method 208 guaranteed
- High temperature soldering guaranteed: 260°C/10s
- Weight: 190 mg (approximately)

MAXIMUM RATINGS AND ELECTRICAL CHARACTERISTICS (T_A=25℃ unless otherwise noted)

PARAMETER		SYMBOL	VALUE	UNIT
Total Power dissipation		P_{TOT}	500	mW
Collector-Base Voltage	BC546	V_{CBO}	80	V
	BC547, BC550		50	
	BC548, BC549		30	
Collector-Emitter Voltage	BC546	V_{CEO}	65	V
	BC547, BC550		45	
	BC548, BC549		30	
Emitter-Base Voltage	BC546	V_{EBO}	6	V
	BC547, BC550		6	
	BC548, BC549		6	
Collector Current		I_C	100	mA
Peak Collector Current		I_{CM}	200	mA
Junction and Storage Temperature Range		T_J , T_{STG}	-65 to + 150	°C

PARAMETER			SYMBOL	MIN	MAX	UNIT
Collector-Base Breakdown Voltage	BC546	I_C= 100μA	$V_{(BR)CBO}$	80	-	V
	BC547, BC550			50		
	BC548, BC549			30		
Collector-Emitter Breakdown Voltage	BC546	I_C= 10mA	$V_{(BR)CEO}$	65	-	V
	BC547, BC550			45		
	BC548, BC549			30		
Emitter-Base Breakdown Voltage	BC546	I_E= 100μA	$V_{(BR)EBO}$	6	-	V
	BC547, BC550			6		
	BC548, BC549			6		
Collector Base Cutoff Current		V_{CB}= 30V	I_{CBO}	-	15	nA
Emitter Base Cutoff Current		V_{EB}= 5 V	I_{EBO}	-	100	nA
DC Current Gain	Current Gain Group: A	V_{CE}= 5V, I_C= 2mA	h_{FE}	110	220	V
	B			200	450	
	C			420	800	

RATINGS AND CHARACTERISTICS CURVES

(TA=25℃ unless otherwise noted)

FIG.1 Static Characteristic

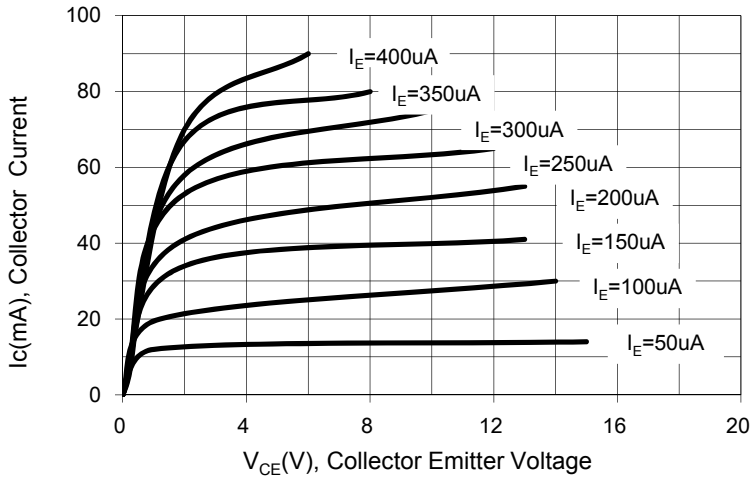

FIG. 2 Transfer Characteristic

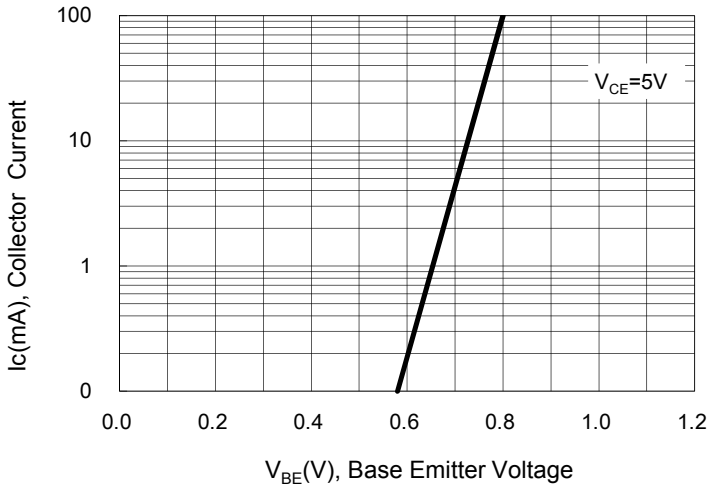

FIG. 3 DC Current Gain

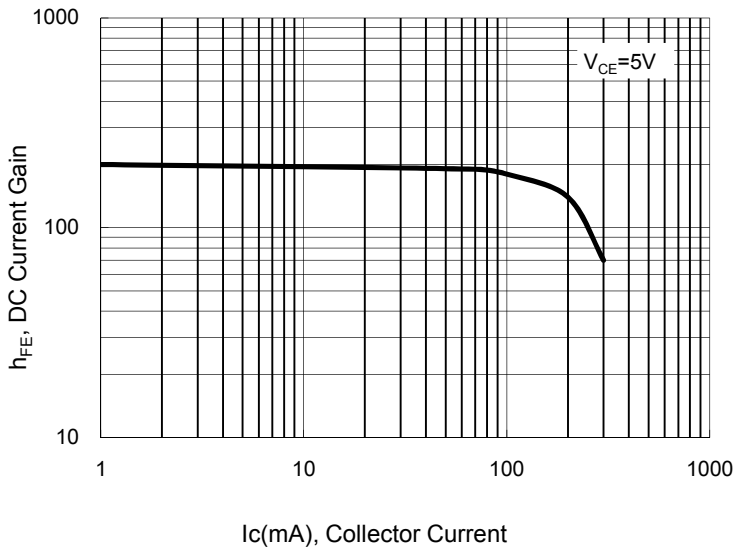

FIG. 4 Base Emitter Saturation Voltage
Collector Emitter Saturation Voltage

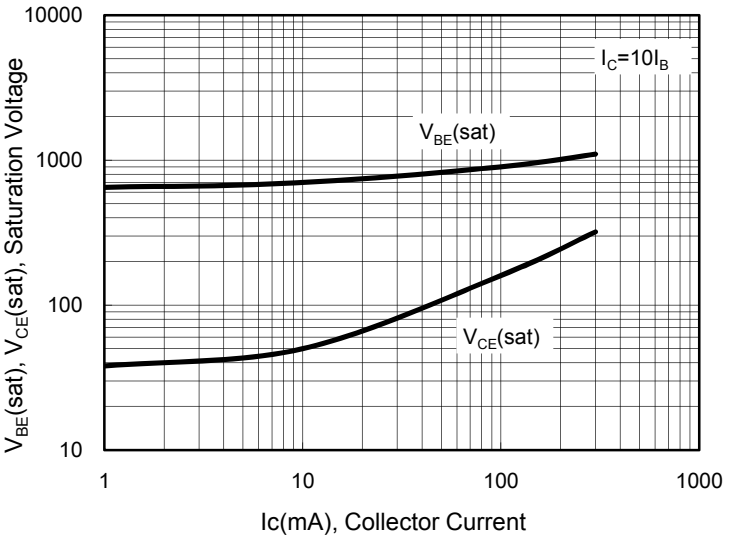

ORDERING INFORMATION						
PART NO.	MANUFACTURE CODE (Note1)	PACKING CODE	GREEN COMPOUND CODE	PACKAGE	PACKING	MARKING
BC5xxA/B/C (Note2)		A1	G	TO-92	4K / Ammo	BC5xxA/B/C (Note2)
BC5xxA/B/C (Note2)		B1	G	TO-92	5K / Bulk	BC5xxA/B/C (Note2)

Note1: Manufacture special control, if empty means no special control requirement.

Note2: "xx" is Device Code from "46" thru "50", and "MARKING" should follow the "PART NO."

EXAMPLE					
PREFERRED P/N	PART NO.	MANUFACTURE CODE	PACKING CODE	GREEN COMPOUND CODE	DESCRIPTION
BC546A A1G	BC546A		A1	G	Green compound

DIMENSIONS

TO-92 Bulk

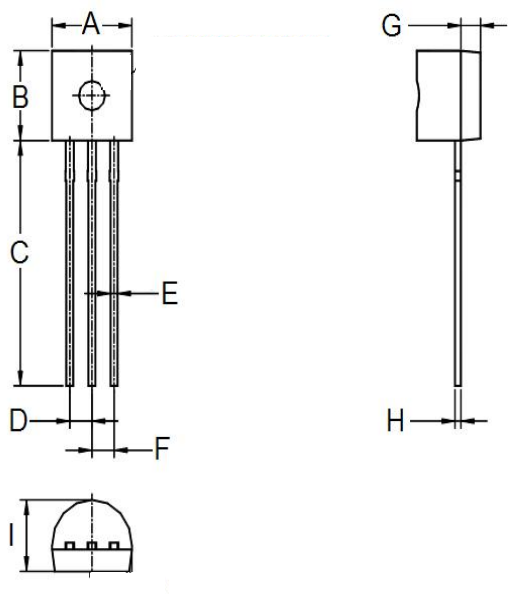

DIM.	Unit (mm)		Unit (inch)	
	Min	Max	Min	Max
A	4.40	5.10	0.173	0.201
B	4.30	4.70	0.169	0.185
C	12.50	14.50	0.492	-
D	1.17	1.37	0.046	0.054
E	0.35	0.55	0.014	0.022
F	1.17	1.37	0.046	0.054
G	0.59	1.40	0.023	0.055
H	0.29	0.51	0.011	0.020
I	3.300	4.100	0.130	0.161

TO-92 Ammo

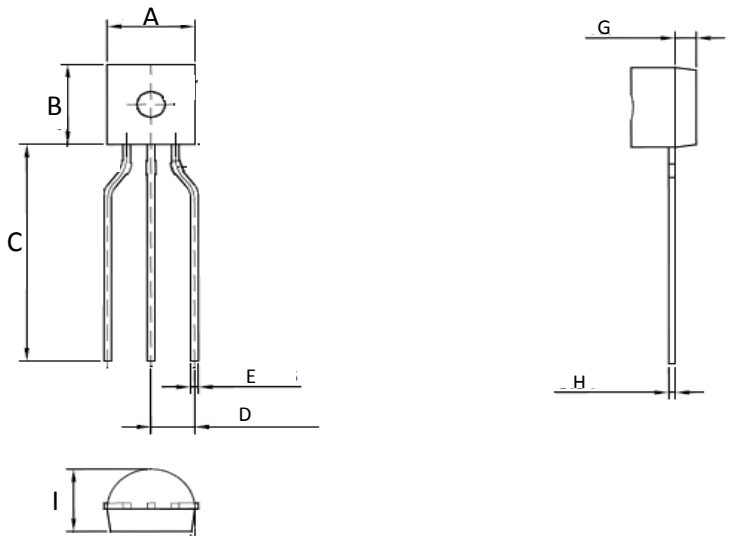

DIM.	Unit (mm)		Unit (inch)	
	Min	Max	Min	Max
A	4.30	4.70	0.169	0.185
B	4.30	4.70	0.169	0.185
C	12.50	-	0.492	-
D	2.20	2.80	0.087	0.110
E	0.35	0.55	0.014	0.022
G	1.00	1.20	0.039	0.047
H	0.29	0.51	0.011	0.020
I	3.30	3.70	0.130	0.146

Notice

Specifications of the products displayed herein are subject to change without notice. TSC or anyone on its behalf, assumes no responsibility or liability for any errors or inaccuracies.

Information contained herein is intended to provide a product description only. No license, express or implied, to any intellectual property rights is granted by this document. Except as provided in TSC's terms and conditions of sale for such products, TSC assumes no liability whatsoever, and disclaims any express or implied warranty, relating to sale and/or use of TSC products including liability or warranties relating to fitness for a particular purpose, merchantability, or infringement of any patent, copyright, or other intellectual property right.

The products shown herein are not designed for use in medical, life-saving, or life-sustaining applications. Customers using or selling these products for use in such applications do so at their own risk and agree to fully indemnify TSC for any damages resulting from such improper use or sale.