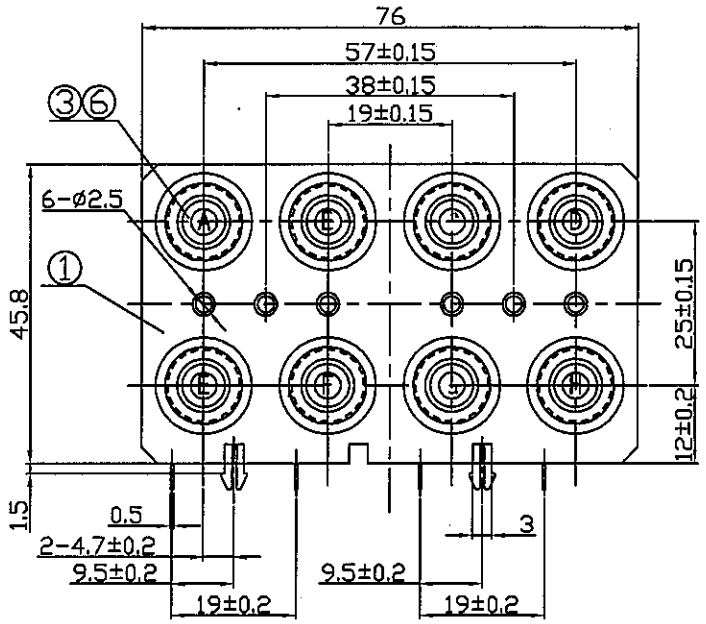

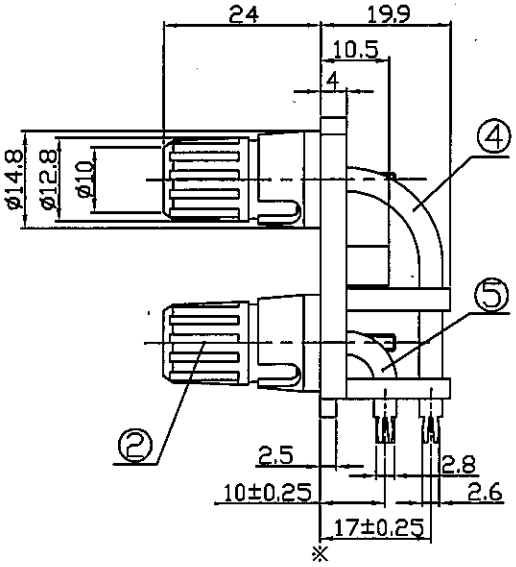

	A	B	C	D	E	F	G	H
010	R	R	R	R	B	B	B	B
020	B	B	B	B	R	R	R	R
030	R	B	B	R	R	B	B	R
040	B	R	R	B	B	R	R	B
050	R	B	R	B	R	B	R	B
060	B	R	B	R	B	R	B	R
070	R	R	B	B	R	R	B	B
080	B	B	R	R	B	B	R	R

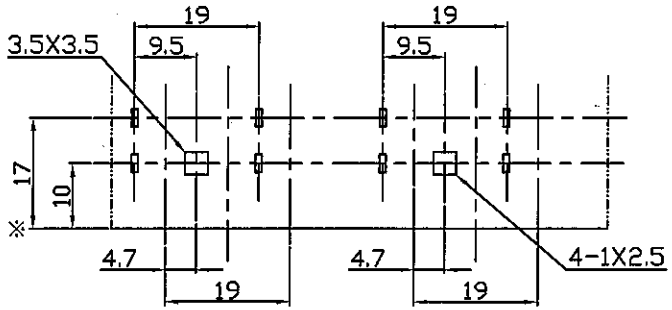

PCB Holes Diagram
Top View

NO.	PART NAME	TER.NO.	QT'Y	MATERIAL	REMARK
6	NUT		8	Fe M3x0.5	Zn-Plated
5	S-TERMINAL		4	H62Y t=0.5	CuSn-Plated
4	L-TERMINAL		4	H62Y t=0.5	CuSn-Plated
3	CLRAL KEY		8	Copper Alloy M3X0.5	CuSn-Plated
2	PUSH		8	ABS-757	See Color Type
1	HOUSING		1	ABS-757	Black

TOLERANCE		UNITS mm
0~6±0.1	X.°±1.5°	MAT'L
6~20±0.2	.X°±1°	
20~90±0.3	.XX°±0.5°	FINISH
		Q'TY

NAME(INTENDED USE)

穩鈦興業有限公司
WUNTAIX CO., LTD

PART NO.(INTENDED USE)
WTN-02-1270RA

TITLE:

APPD:

DWG NO.: **C02052**

CHKD:

DR: CH 2008/11/04

SCALE	SHEET	REV.
N/A	1/1	A