PCB terminal block — TL series (Wire Protector)— TL001V



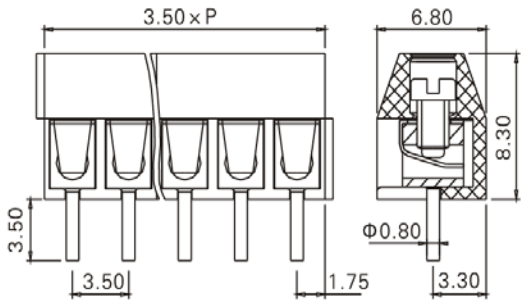

图示(Pic. shown)：TL001V-05P-K02S

General.

PCB termial block　Rated :250V,10A，1mm²
Single row , 3.5mm pitch， 02-24 Pole
Connection angle: 180°(wire-to-board)
Screw clamp unit: M2.0, 0.2Nm Max

认证（Approval）：

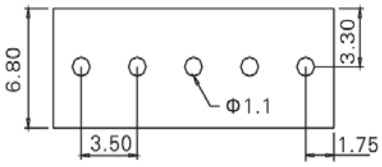

PCB Layout

技术参数Technical Data	UL standard			IEC standard		
UL应用组别(UL Application group)	UL Application group			IEC过电压别/污染等级(IEC overvoltage category /pollution degree)		
IEC过电压别/污染等级(IEC overvoltage category /pollution degree)	B	C	D	III / 3	III / 2	II / 2
额定电压(Rated voltage)	300V	--	300V	--	250V	--
额定电流(Rated current)	10A	--	10A	--	10A	--
额定连接容量(Rated connection capacity)	16-24AWG Sol&Str			0.25-1mm²		
绝缘材料(Insulation Material)	PA66 UL94 V-0					
电流承载部件材料和镀层(Material & Plating of Current carrier)	Copper alloy ，Tin plated					
接线弹片材料(Material of Clamp spring)	--					
绝缘电阻(Insulation Resistance)	500MΩ or more at DC500V					
耐电压(1分钟)(Withstanding Voltage/1Min)	1600V					
额定冲击电压(Rated surge voltage)	--					
接线螺丝(Wire clamp unit Screw)，最大扭矩(torque Max.)	M2.0 ,0.2Nm Max					
固定螺丝(Mounting Screw)，扭矩(torque)	--					
剥线长度(Wire stripping length)	5.5mm					
使用温度(Operating temperature)	-30°C up to +105°C					
焊接方式(Soldering recommend)	Wave soldering ,260°C 5S Max (Single Wave) , 260°C 10S Max(Double Wave)					

订购方式(How to order)

TL	0	01	V	—	XXXX	—	XXP	—	G12	S
Series No. 系列号	Pitch间距 0=3.50mm	Differentiate Number 区分号	Connection angle 角度 V=180° wire-to-board		Special code 特编号 XXXX=custom-made blank=standard		No. of Poles 极数 02-24P		Color 颜色 Green: G12 Black：K02	Screw Type 螺丝S=Slot C=Cross

Web:wwww.china-tianli.com　TEL:+86-574-6347-9600,6389-6436　Mail：sale@china-tianli.cn
地址:中国浙江省宁波杭州湾新区庵东工业园区纬三路138号
ADD：138，Weisan Rd.,Andong Development Zone,Hangzhou Bay Area,Ningbo,Zhejiang,China