PCB Connector — TLP series (Pin header)— TLPHC-300V



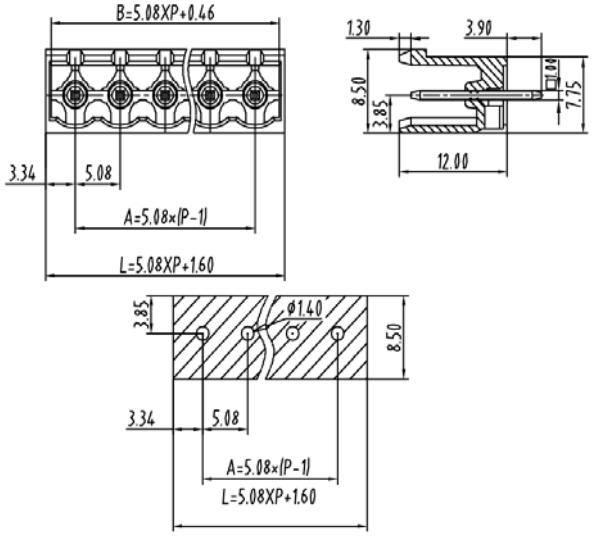

图示(Pic. shown)：TLPHC-300V-06P-G12

General.

PCB Connector Rated : 320V,20A	
Single row , 5.08mm pitch , 02-24 Pole	
Orientation:90°(plug-in to board)	

认证（Approval）：

技术参数Technical Data

	UL standard			IEC standard		
UL应用组别(UL Application group)	UL Application group			IEC过电压别/污染等级(IEC overvoltage category /pollution degree)		
IEC过电压别/污染等级(IEC overvoltage category /pollution degree)	B	C	D	III / 3	III / 2	II / 2
额定电压(Rated voltage)	300V	--	300V	--	320V	--
额定电流(Rated current)	16A	--	10A	--	20A	--
额定连接容量(Rated connection capacity)	--			--		
绝缘材料(Insulation Material)	PA66 UL94 V-0					
电流承载部件材料和镀层(Material & Plating of Current carrier)	Copper alloy ，Tin plated					
接线弹片材料(Material of Clamp spring)	--					
绝缘电阻(Insulation Resistance)	500MΩ or more at DC500V					
耐电压(1分钟)(Withstanding Voltage/1Min)	2200V					
额定冲击电压(Rated surge voltage)	--					
接线螺丝(Wire clamp unit Screw)，最大扭矩(torque Max.)	--					
固定螺丝(Mounting Screw)，扭矩(torque)	--					
剥线长度(Wire stripping length)	--					
使用温度(Operating temperature)	-40°C up to +105°C					
焊接方式(Soldering recommend)	Wave soldering ,260°C 5S Max (Single Wave) , 260°C 10S Max(Double Wave)					

订购方式(How to order)

TLPHC	3	00	V	—	XXXX	—	XXP	—	G12
Series No. 系列号	Pitch间距 3=5.08mm	Differentiate Number 区分号	Connection angle 角度 V=90° plug-in to board		Special code 特编号 XXXX=custom-made blank=standard		No. of Poles 极数 02-24P		Color 颜色 Green：G12

Web:wwww.china-tianli.com TEL:+86-574-6347-9600,6389-6436 Mail : sale@china-tianli.cn
地址:中国浙江省宁波杭州湾新区庵东工业园区纬三路138号
ADD：138，Weisan Rd.,Andong Development Zone,Hangzhou Bay Area,Ningbo,Zhejiang,China

编码片 Coding key



P/N:
TLPCK-003-S

插头（Female Connector）— single row



P/N：TLPS-300V
Wiring orientation：
180°(wire to plug-in)
Rated：320V,20A，2.5mm²
Screw clamp unit: M3.0， 0.5Nm



P/N：TLPS-300R
Wiring orientation：
90°(wire to plug-in)
Rated：320V,20A，2.5mm²
Screw clamp unit: M2.5， 0.4Nm



P/N：TLPS-300RL
Wiring orientation：
270°(wire to plug-in)
Rated：320V,20A，2.5mm²
Screw clamp unit: M2.5， 0.4Nm



P/N：TLPS-302V
Wiring orientation：
180°(wire to plug-in)
Rated：320V,12A，2.5mm²
Spring clamp unit.



P/N：TLPS-301
Wiring orientation：
180°(wire to plug-in)
Rated：320V,20A，2.5mm²
Screw clamp unit: M2.5， 0.5Nm