TO-220 Plastic Package

MJE15028, MJE15030
MJE15029, MJE15031

MJE15028, 15030 NPN PLASTIC POWER TRANSISTORS
MJE15029, 15031 PNP PLASTIC POWER TRANSISTORS
High frequency Drivers in Audio Amplifiers

PIN CONFIGURATION
1. BASE
2. COLLECTOR
3. EMITTER
4. COLLECTOR

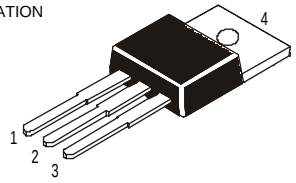

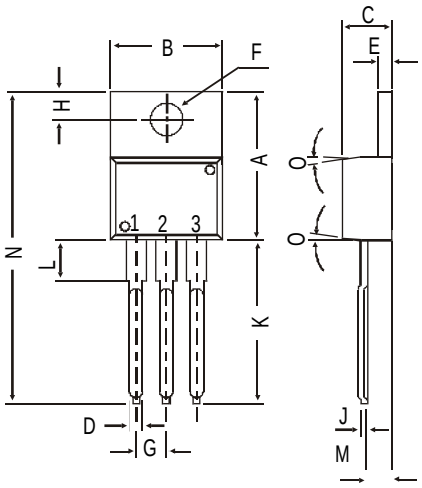

All diminsions in mm.

DIM	MIN.	MAX.
A	14.42	16.51
B	9.63	10.67
C	3.56	4.83
D		0.90
E	1.15	1.40
F	3.75	3.88
G	2.29	2.79
H	2.54	3.43
J		0.56
K	12.70	14.73
L	2.80	4.07
M	2.03	2.92
N		31.24
O	DEG 7	

ABSOLUTE MAXIMUM RATINGS

			15028 ***15029***	***15030*** ***15031***	
Collector-base voltage (open emitter)	V_{CBO}	*max.*	*120*	*150*	*V*
Collector-emitter voltage (open base)	V_{CEO}	*max.*	*120*	*150*	*V*
Collector current	I_C	*max.*	*8.0*		*A*
Total power dissipation up to T_C = 25°C	P_{tot}	*max.*	*50*		*W*
Junction temperature	T_j	*max.*	*150*		*°C*
Collector-emitter saturation voltage					
I_C = 1A; I_B = 0.1A	V_{CEsat}	*max.*	*0.5*		*V*
D.C. current gain					
I_C = 0.1 A; V_{CE} = 2 V	h_{FE}	*min.*	*40*		

RATINGS *(at T_A=25°C unless otherwise specified)*

			15028 ***15029***	***15030*** ***15031***	
Limiting values					
Collector-base voltage (open emitter)	V_{CBO}	*max.*	*120*	*150*	*V*
Collector-emitter voltage (open base)	V_{CEO}	*max.*	*120*	*150*	*V*

Emitter base voltage (open collector)	V_{EBO}	*max.*	*5.0*	*V*
Collector current	I_C	*max.*	*8.0*	*A*
Collector current (Peak value)	I_C	*max.*	*16*	*A*
Base current	I_B	*max.*	*2.0*	*A*
Total power dissipation up to T_C = 25°C	P_{tot}	*max.*	*50*	*W*
Derate above 25°C		*max.*	*0.4*	*W/°C*
Total power dissipation up to T_A = 25°C	P_{tot}	*max.*	*2.0*	*W*
Derate above 25°C		*max.*	*0.016*	*W/°C*
Junction temperature	T_j	*max.*	*150*	*°C*
Storage temperature	T_{stg}		*–65 to +150*	*°C*

THERMAL RESISTANCE

From junction to case	$R_{th\ j-c}$	=	*2.5*	*°C/W*
From junction to ambient	$R_{th\ j-a}$	=	*62.5*	*°C/W*

CHARACTERISTICS

T_{amb} = 25°C unless otherwise specified

			15028 15029	***15030 15031***	
Collector cutoff current					
I_B = 0; V_{CE} = 120V	I_{CEO}	*max.*	*0.1*	*–*	*mA*
I_B = 0; V_{CE} = 150V	I_{CEO}	*max.*	*–*	*0.1*	*mA*
I_E = 0; V_{CB} = 120V	I_{CBO}	*max.*	*10*	*–*	*µA*
I_E = 0; V_{CB} = 150V	I_{CBO}	*max.*	*–*	*10*	*µA*
Emitter cut-off current					
I_C = 0; V_{EB} = 5V	I_{EBO}	*max.*	*10*		*µA*
Breakdown voltages					
I_C = 10 mA; I_B = 0	$V_{CEO(sus)}$*	*min.*	*120*	*150*	*V*
I_C = 1 mA; I_E = 0	V_{CBO}	*min.*	*120*	*150*	*V*
I_E = 1 mA; I_C = 0	V_{EBO}	*min.*	*5.0*		*V*
Saturation voltage					
I_C = 1 A; I_B = 0.1 A	V_{CEsat}*	*max.*	*0.5*		*V*
Base emitter on voltage					
I_C = 1A; V_{CE} = 2V	$V_{BE(on)}$*	*max.*	*1.0*		*V*
D.C. current gain					
I_C = 0.1 A; V_{CE} = 2 V	h_{FE}*	*min.*	*40*		
I_C = 2 A; V_{CE} = 2 V	h_{FE}*	*min.*	*40*		
I_C = 3 A; V_{CE} = 2 V	h_{FE}*	*min.*	*40*		
I_C = 4 A; V_{CE} = 2 V	h_{FE}*	*min.*	*20*		
Transition frequency f = 10 MHz					
I_C = 500 mA; V_{CE} = 10 V	$f_T(1)$	*min.*	*30*		*MHz*

** Pulse test: pulse width ≤ 300 µs; duty cycle ≤ 2%.*

(1) $f_T = |h_{fe}| \cdot f_{test}$

Customer Notes

Disclaimer

The product information and the selection guides facilitate selection of the CDIL's Discrete Semiconductor Device(s) best suited for application in your product(s) as per your requirement. It is recommended that you completely review our Data Sheet(s) so as to confirm that the Device(s) meet functionality parameters for your application. The information furnished on the CDIL Web Site/ CD are believed to be accurate and reliable. CDIL however, does not assume responsibility for inaccuracies or incomplete information. Furthermore, CDIL does not assume liability whatsoever, arising out of the application or use of any CDIL product; neither does it convey any license under its patent rights nor rights of others. These products are not designed for use in life saving/support appliances or systems. CDIL customers selling these products (either as individual Discrete Semiconductor Devices or incorporated in their end products), in any life saving/support appliances or systems or applications do so at their own risk and CDIL will not be responsible for any damages resulting from such sale(s).

CDIL strives for continuous improvement and reserves the right to change the specifications of its products without prior notice.

CDIL is a registered Trademark of
Continental Device India Limited
C-120 Naraina Industrial Area, New Delhi 110 028, India.
Telephone + 91-11-2579 6150, 5141 1112 Fax + 91-11-2579 5290, 5141 1119
email@cdil.com www.cdilsemi.com