MAXIVAL®



GENERAL DESCRIPTION

Breaking capacity	1000 A
Voltage rating	32 V
Ambient temp. + overheating	-40 °C to +125 °C
Body material	PA66-GF25
Cover material	*See table below*
Cover color	Transparent
Blade material	Zinc
Blade coating	Tin plated
Compliant with	ISO 8820-3 (type E) REACH, RoHS

OVERALL DIMENSIONS

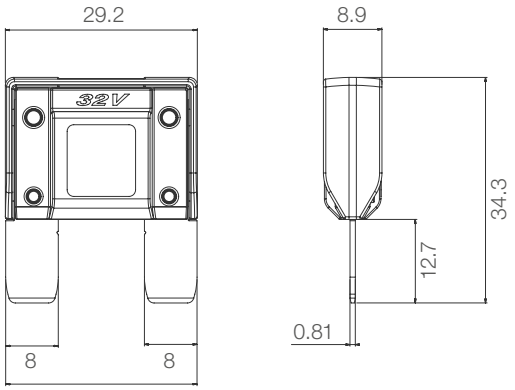

Dimensions in mm.

MELTING TIME AND CURVE

Operating time limits:

% IR	Min [s]	Max [s]
100	360000	∞
135*	60	600**
160	10	200
200	2	60
350	0.2	7
600	0.04	1

*Not required for 100 A high current fuse-links.
**Exceeds ISO requirements (900 s).

Melting time graph at 23°C on test module ISO.

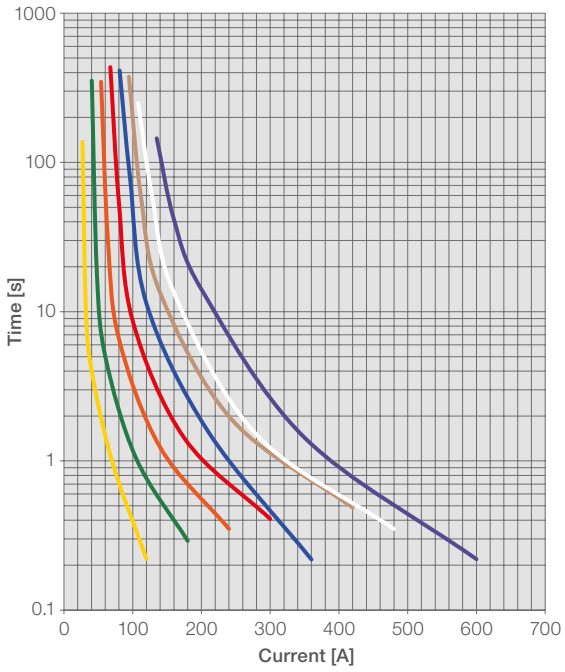

RATINGS

Size [A]	Color coding	Cover material	Expected voltage drop [mV]	ISO cable size [mm²]	I²t* [A²s]
20	Yellow	PSU	105	4.0	2880
30	Green	PSU	95	4.0	7069
40	Orange	PSU	90	4.0	23120
50	Red	PSU	89	6.0	36980
60	Blue	PESU	84	6.0	40680
70	Beige	PESU	87	10.0	112500
80	Natural	PESU	85	10.0	23120
100	Violet	PESU	89.5	16.0	65000

*Calculated from breaking capacity test.

RERATING CURVE

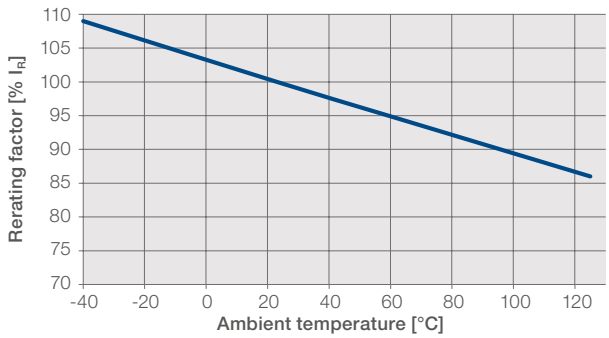

Products, information, drawings, specifications and reference numbers (hereafter "contents") discussed herein are for reference purposes only. All contents herein are provided on an "as is" basis, without warranties of any kind. The contents discussed herein remain the sole and exclusive property of MTA S.p.A. and shall not be copied, translated in whole or in part without MTA S.p.A. prior written consent. No license of any patent, copyright, mask work, trademark or any other intellectual property right is granted under this document, by implication, estoppel or otherwise. Contents may be modified and changed by MTA S.p.A. without any notice. For updates or additional information about MTA products, please contact your nearest MTA office. All brand names, trademarks and registered trademarks belong to their respective owners.