# MINIVAL®



## GENERAL DESCRIPTION

| | |
|---|---|
| Breaking capacity | 1000 A |
| Voltage rating | 32 V |
| Ambient temp. + overheating | -40 °C to +125 °C |
| Body material | *See table below* |
| Cover material | PSU |
| Cover color | Transparent |
| Blade material | Zinc |
| Blade coating | Tin plated |
| Compliant with | ISO 8820-3 (type F)<br>REACH, RoHS |

## OVERALL DIMENSIONS

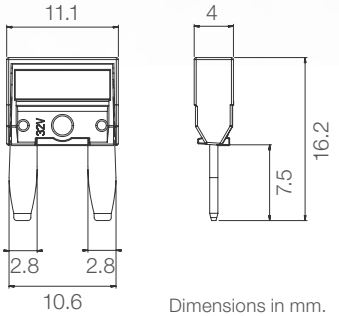


Dimensions in mm.

## MELTING TIME AND CURVE

Operating time limits:

| % IR | Min [s] | Max [s] |
|---|---|---|
| 110 | 360000 | ∞ |
| 135 | 0.75 | 120* |
| 160 | 0.25 | 50 |
| 200 | 0.15 | 5 |
| 350 | 0.04 | 0.5 |
| 600 | 0.02 | 0.1 |

*Exceeds ISO requirements (600 s).

Melting time graph at 23°C on test module ISO.

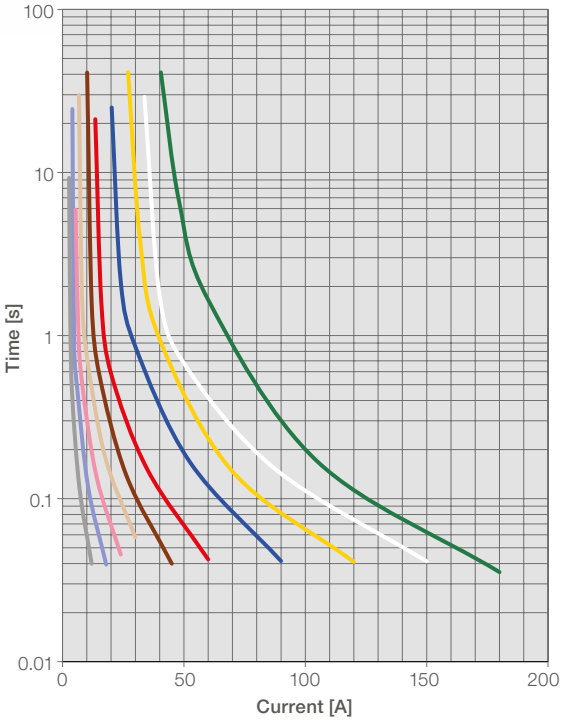


## RATINGS

| Size [A] | Color coding | Body material | Expected voltage drop [mV] | ISO cable size [mm²] | I²t* [A²s] |
|---|---|---|---|---|---|
| 2 | Grey | PC | 128 | 0.35 | 135 |
| 3 | Violet | PC | 122 | 0.35 | 115 |
| 4 | Pink | PC | 121 | 0.35 | 156 |
| 5 | Beige | PC | 112 | 0.5 | 217 |
| 7.5 | Brown | PC | 110 | 0.75 | 256 |
| 10 | Red | PC | 106 | 1.0 | 387 |
| 15 | Blue | PC | 105 | 1.5 | 720 |
| 20 | Yellow | PC | 97 | 2.5 | 980 |
| 25 | Natural | PSU | 96 | 2.5 | 1344 |
| 30 | Green | PSU | 95 | 4.0 | 1692 |

*Calculated from breaking capacity test.

## RERATING CURVE

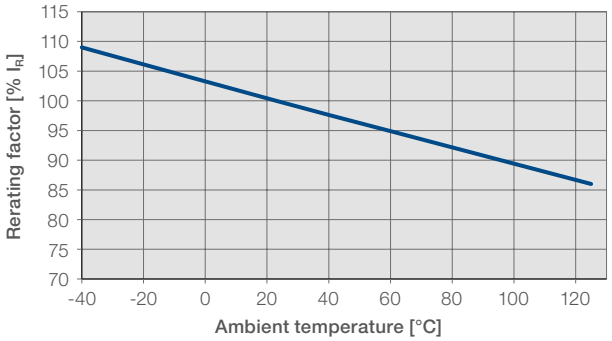


Products, information, drawings, specifications and reference numbers (hereafter "contents") discussed herein are for reference purposes only. All contents herein are provided on an "as is" basis, without warranties of any kind. The contents discussed herein remain the sole and exclusive property of MTA S.p.A. and shall not be copied, translated in whole or in part without MTA S.p.A. prior written consent. No license of any patent, copyright, mask work, trademark or any other intellectual property right is granted under this document, by implication, estoppel or otherwise. Contents may be modified and changed by MTA S.p.A. without any notice. For updates or additional information about MTA products, please contact your nearest MTA office. All brand names, trademarks and registered trademarks belong to their respective owners.