1½ MODULE ENCLOSURE FOR M36 DIN-RAIL

SERIES 225

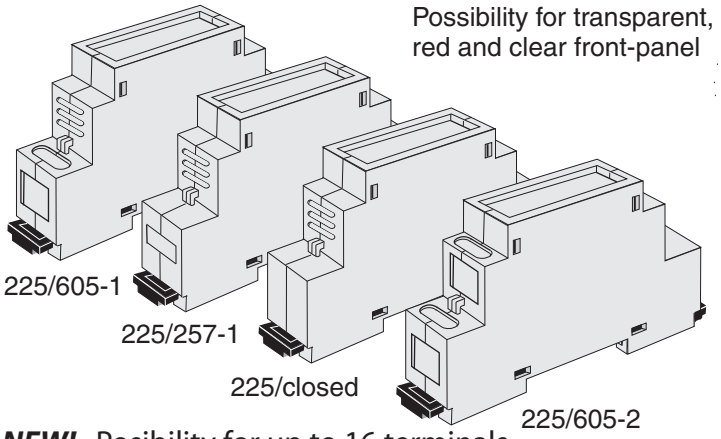

Module enclosure for M36 DIN-rail. Series 225 is, if requested, available in several colours and with custom made holes in the front. Lid, PCB, customized label and packing is available. Possibility for both base and top PCB. ,

TECHNICAL DATA:

TOP PART:

Material:	PC (ABS on request)
Colour:	Grey (RAL 7035)
Max. temperature:	100°C
Width:	225 mm
Self-extinguishing:	Acc. to UL94-V0
Max. wire dia.:	2 x 2.5 mm²
Terminals:	4 x (2 or 4) fixed or plug
Mounting:	DIN-rail (EN50022).

NEW! Posibility for up to 16 terminals

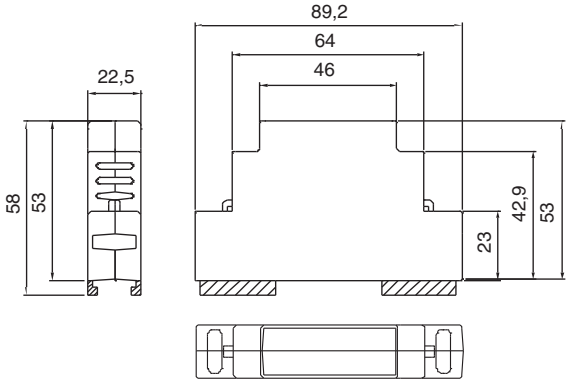

Side PCB dimensions

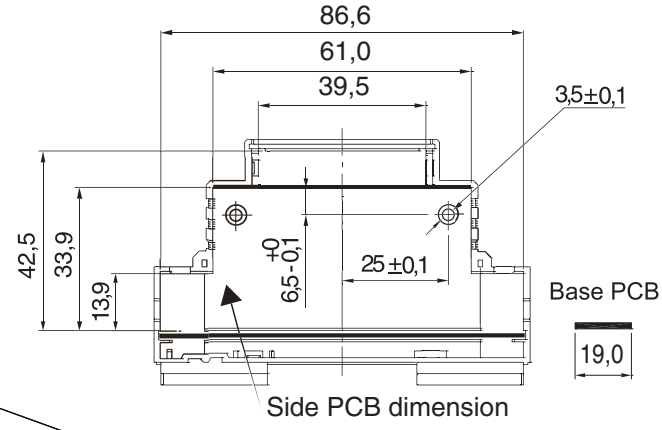

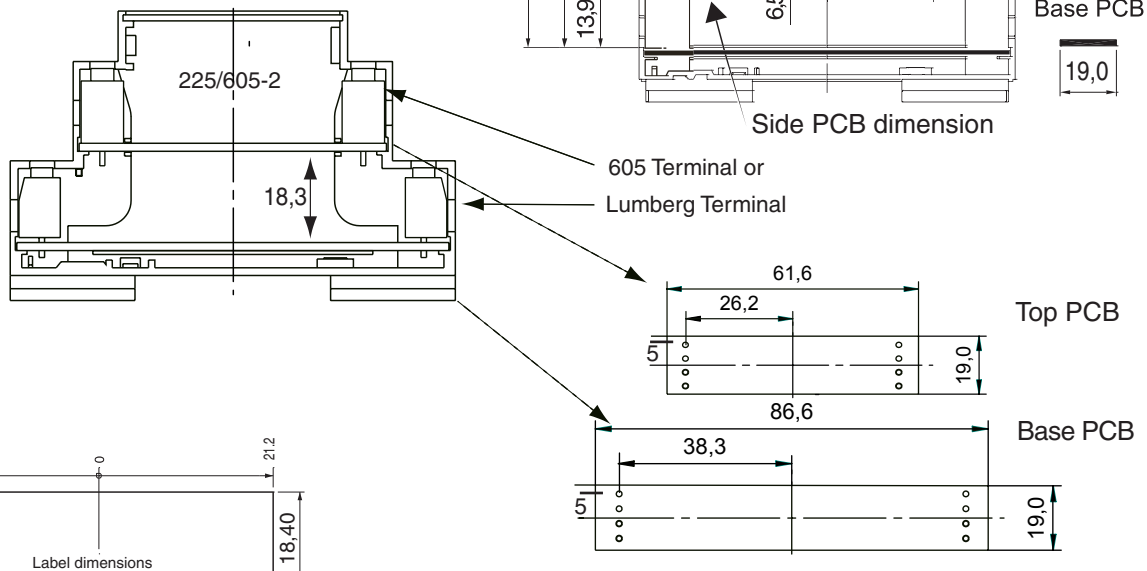

TYPE 225/605	ORDER CODE
225/605-1 complete: 2 shells + 2 clips + 1 front cover + 2 screws	p/n 4969225605
225/605-2 complete	p/n 4969225205
225/257-1 complete	p/n 4969225257
225/ closed - complete	p/n 4969225100
Packing for 225 (on request only)	p/n 2068225000
Terminal for 225 605/4 fixed	p/n 3950144108

- All measurements are in mm.