YSL50 SERIES



Input: 100-240VAC/200-240V 50-60Hz
Output Voltage: 12V,24V,36V, 48V
Rated Power: 60W max

Features

- Universal Input: 100-240V/200-240V AC 50-60Hz
- RoHS Compliance
- EMI Standard EN55015
- Safety Standard: EN61347-1, EN61347-2-13, UL8750
- Inrush current<65A AC230V/50Hz
- High efficiency & low power consumption
- Short Circuit, Over Current and Over Voltage Protection
- Over temperature protection
- 100% full load burn-in test

Application

LED strips
LED indoor lighting
LED decorative lighting
LED building lighting

Dimensions and Installation

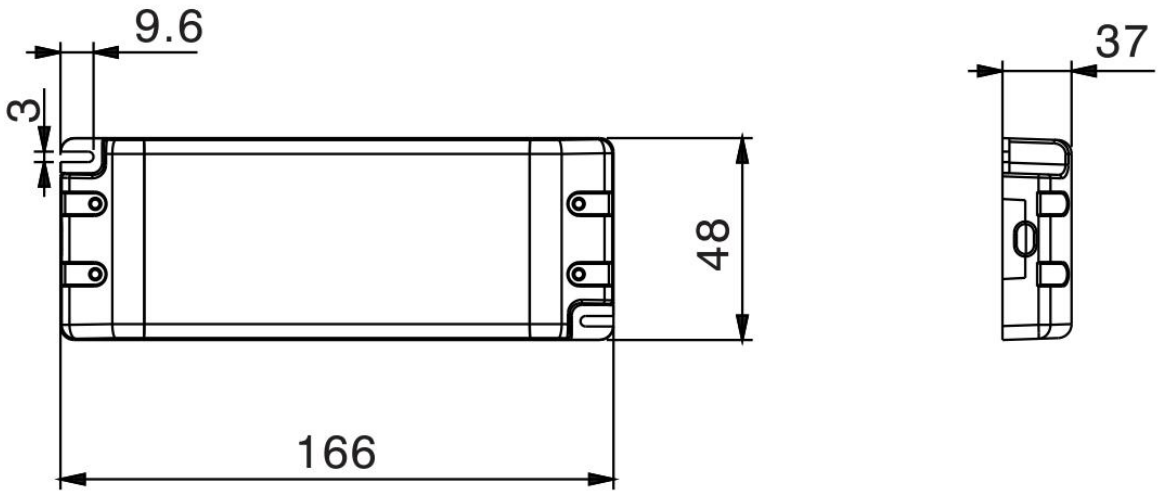

YSL50 SERIES

MODEL DETAIL SPEC.		YSL50-1205000	YSL50-2402500	YSL50-3601660	YSL50-4801250
INPUT	Input Voltage:	100-240VAC/ 200-240VAC			
	Input Frequency:	50-60Hz			
	Inrush Current:	65 Amps max. at 230VAC/50Hz,full load			
	AC Current:	0.17A/230VAC			
	Leakage Current:	< 0.35mA/240VAC			
	Efficiency:	89%	89%	89%	89%
OUTPUT	DC Voltage:	12V	24V	36V	48V
	Rated Current:	5000mA	2500mA	1660mA	1250mA
	Rated Power:	60W	60W	60W	60W
	Voltage Tolerance:	±5.0%	±5.0%	±5.0%	±5.0%
	Ripple and Noise:	120mVp-p	240mVp-p	360mVp-p	480mVp-p
	Line Regulation:	±3%			
	Load Regulation:	±5%			
	Setup, Rise, Hold Up time:	1s, 10ms/60ms 230VAC 1000ms, 1ms/25ms 115VAC at full load			
ENVIRONMENTAL	Operating Temperature:	-20 ～ +50 (Refer to "Derating Curve")			
	Storage Temp:	-40℃ ～ 85℃			
	Storage Humidity:	20 ～ 95% RH			
	Working Humidity:	20 ～ 95% RH non-condensing			
PROTECTION	Over Load:	Above 105%-130% rated output power			
		Protection type: Hiccup mode, recovers automatically after fault condition is removed			
	Over Voltage:	12V:13.8 ～ 16.2V 24V:27.6 ～ 32.4V 36V:41.4～48.6V 48V：55.2～64.8V			
		Protection type: Shut down o/p voltage, re-power on to recover			
	Over Temperature:	Shut down o/p voltage, re-power on to recover			
SAFETY & EMC	Safety Regulations:	EN61347-2-13:2014+A1:2017,EN61347-1:2015;EN62493:2015			
	Withstand Voltage:	I/P-O/P:3750KVAC			
	Harmonic	EN61000-3-2 Class C EN61000-3-3			
	EMI:	Compliance to EN55015			
	EMS：	compliance to 61547:2009			
OTHER	MTBF:	200,000 Hours Minimum at Full Load at 25℃ Ambient			
	Size:	166*48*37mm			
	Weight:	220g / pcs			
	Packaging:	100PCS/CTN,37.5*28.5*24cm			

YSL50 SERIES

Deduction curve and temperature

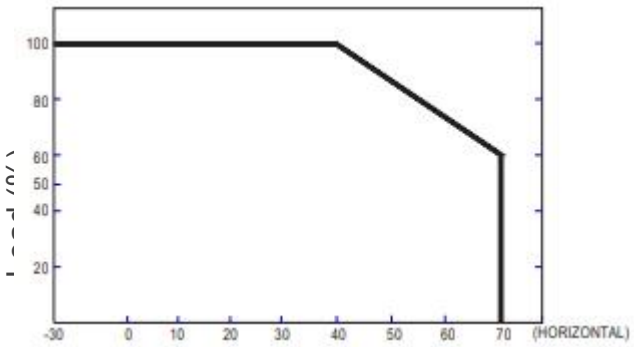

Environment temperature(℃)

Minus output and input voltage curves

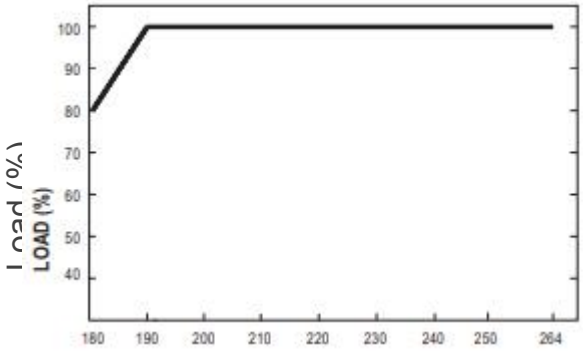

Input voltage(VAC)

Functional Diagram

