Quartz Crystal

SERIES 6A, Resistance Welded HC-49/U Package

FEATURE

- Height 13.46mm
- A resistance weld completely sealed type
- The tight frequency stability
- Copes with high density mounting and is the optimum for mass production

ELECTRICAL SPECIFICATIONS

Nominal frequency:	1.8432MHz to 150.000MHz
Oscillation mode:	See below table
Operating temperature range	-20℃--+70℃ (Typical), -10℃ ~ +60℃, -40℃ ~ +85℃, or specify
Storage temperature range	-40℃--+85℃
Frequency tolerance:	±30PPM at 25±2℃ (Typical), or specify
Frequency stability	±50PPM over -20~70℃ (Typical), or specify
Load capacitance:	16pF, 18pF, 20pF, 30pF, series, or specify
Equivalent series resistance	See below table
Parallel capacitance(Co):	7PF Max
Drive level	100 μW Typical
Insulation resistance:	More than 500MΩ AT DC100V

EQUIVALENT SERIES RESISTANCE(ESR) AND OSCILLATION MODE

Frequency Range	E.S.R (Ω)	Mode	Frequency Range	E.S.R (Ω)	Mode
1.843MHz~1.999MHz	350Max	Fundamental/AT	6.000MHz~6.999MHz	50Max	Fundamental/ AT
2.000MHz~2.399MHz	300Max	Fundamental/AT	7.000MHz~9.999MHz	30Max	Fundamental/ AT
2.400MHz~2.999MHz	200Max	Fundamental/AT	10.000MHz~12.999MHz	20Max	Fundamental/ AT
3.000MHz~3.199MHz	150Max	Fundamental/AT	13.000MHz~30.000MHz	20Max	Fundamental/ AT
3.200MHz~3.499 MHz	100Max	Fundamental/AT	24.000MHz~29.999MHz	50Max	Third Overtone
3.500MHz~3.899MHz	90Max	Fundamental/AT	30.000MHz~65.000MHz	40Max	Third Overtone
3.900MHz~4.099MHz	70Max	Fundamental/AT	60.000MHz~99.999MHz	90Max	Third Overtone
4.100MHz~5.999MHz	60Max	Fundamental/AT	100.000MHz~150.000MHz	60Max	Fundamental/ AT

QUARTZ CRYSTAL

SERIES 6B, RESISTANCE WELDED HC-49/S LOW PROFILE PACKAGE

Reliability

Aging	±3PPM Max/Year
Air tightness	
(1) Gross leak	should be immerged in hot water(90±5℃) for 5 minutes
(2) Fine leak	should be less than 5 x 10^{-8} atmcc/sec by helium leak detector
Low drive characteristics	Measured Δ1,C1,3 point at 1.0,,10,100μW

Dimension

HC-49S

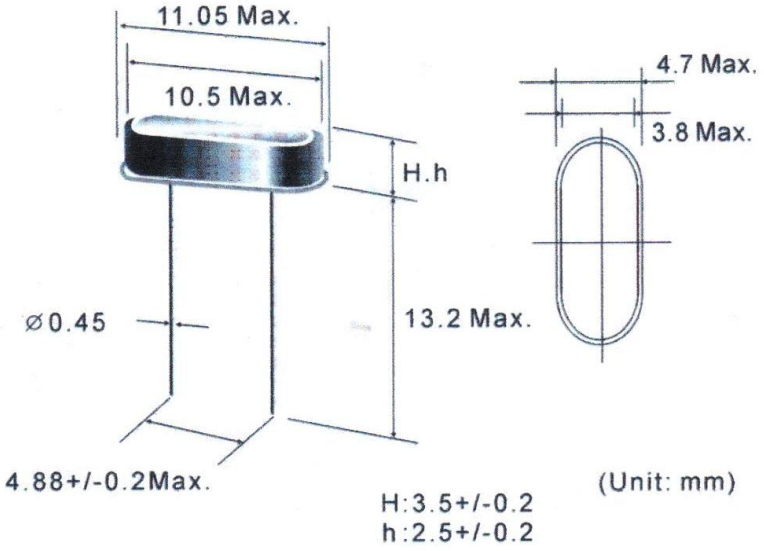

PART NUMBER

SJK -6B-

20.000	20	30	40	F	B	50	H
Frequency e.g. 20.000:20.000 MHz	Load capacitance e.g. 20.20pf s:series	Frequency tolerance e.g. 30:±30ppm	E.S.R.max e.g. 20:40Ωmax	oscillate mode F:Fundemental 3:3rd overtone 5:5th overtone	operating temperature range A:-10-60℃ B:-20-70℃ C:-40-85℃	temperature stability: e.g. 50:±50ppm	H:Normal (3.2mm) h:low (2.5mm)