# QUARTZ CRYSTAL

## SERIES 6B, RESISTANCE WELDED HC-49/S LOW PROFILE PACKAGE

SJK

## FEATURE

- Standard height 3.5mm, the part is compact at about one-fourth of the HC-49/U package
- A resistance weld completely sealed type
- Good stability and high reliability
- Copes with high density mounting and is the optimum for mass production

## ELECTRICAL SPECIFICATIONS

| Nominal frequency | 3.000MHz to 100MHz |
|---|---|
| Oscillation mode | See below table |
| Operating temperature range | -20℃--+70℃ (Typical), -10℃ ~ +60℃, -40℃ ~ +85℃, or specify |
| Storage temperature range | -40℃--+85℃ |
| Frequency tolerance | ±30PPM at 25±2℃ (Typical), or specify |
| Freq. Temp characteristics | ±50PPM -20℃--+70℃ (Typical), or specify |
| Load capacitance | Series, 16pF, 20pF, 30pF, or specify |
| Equivalent series resistance | See below table |
| Parallel capacitance(Co) | 7PF Max |
| Drive level | 100 μW |
| Insulation resistance | More than 500MΩ AT DC100V |

## EQUIVALENT SERIES RESISTANCE(ESR) AND OSCILLATION MODE

| Frequency Range | E.S.R (Ω) | Mode | Frequency Range | E.S.R (Ω) | Mode |
|---|---|---|---|---|---|
| 3.000MHz~5.999MHz | 150Max | Fundamental/AT | 24.000MHz~40.320MHz | 30Max | Fundamental/AT |
| 6.000MHz~7.999MHz | 60Max | Fundamental/AT | 24.000MHz~29.999MHz | 100Max | Third Overtone /AT |
| 8.000MHz~15.999MHz | 50Max | Fundamental/AT | 30.000MHz~49.999MHz | 80Max | Third Overtone /AT |
| 16.000MHz~30.000MHz | 30Max | Fundamental/AT | 50.000MHz~100.000MHz | 60Max | Third Overtone /AT |

## Mechanical characteristics

| | |
|---|---|
| Resistance to shock: | ±3PPM Max ±3Ω Max, Naturally drop it 3 times on a hard wood plate from 100cm height |
| Resistance to vibration: | ±3PPM Max ±3Ω Max |

# Quartz Crystal

***SERIES 6A, Resistance Welded HC-49/U Package***

## Mechanical characteristics

| | |
|---|---|
| Resistance to shock: | ±3PPM Max ±3Ω Max, Naturally drop it 3 times on a hard wood plate from 100cm height |
| Resistance to vibration: | ±3PPM Max ±3Ω Max |

## Reliability

| | |
|---|---|
| Aging | ±3PPM Max/Year |
| Air tightness | |
| (1) Gross leak | should be immerged in hot water(90±5℃) for 5 minutes |
| (2) Fine leak | should be less than $5 \times 10^{-8}$ atmcc/sec by helium leak detector |
| Low drive characteristics | Measured Δ1,C1,3 point at 1.0,,10,100μW |

## Dimension

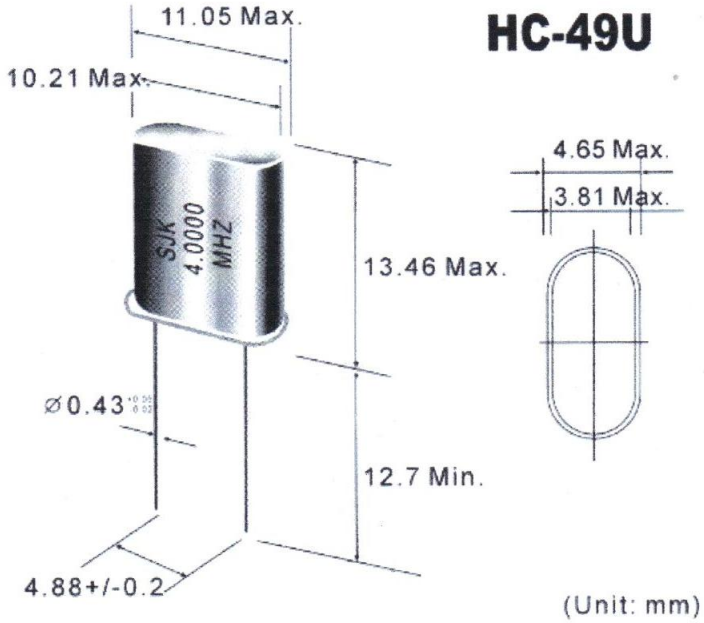


**PART NUMBER**

SJK-6A-

| 20.000 | 20 | 30 | 40 | F | A | 50 |
|---|---|---|---|---|---|---|
| Frequency e.g. 20.000:20.000 MHz | Load capacitance e.g. 20.20pf s:series | Frequency tolerance e.g. 30:±30ppm | E.S.R.max e.g. 20:40Ωmax | oscillate mode F Fundamental 3:3rd overtone 5:5th overtone | operating temperature range A:-10-60℃ B:-20-70℃ C:-40-85℃ | temperature stability: e.g. 50:±50ppm |